+ 80 %

BSA SPARES

1954 & 1955

"A" MODELS
TWIN CYLINDER
500 c.c. and 650 c.c.

Price 5/-

1954 and 1955

MODELS

A7 . .	500 c.c.	O.H.V.	(Plunger Frame)
A7 . .	500 c.c.	,,	(Swinging Arm)
STAR TWIN	500 c.c.	,,	(Plunger Frame)
SHOOTING STAR	500 c.c.	,,	(Swinging Arm)
A10 .	650 c.c.	,,	(Plunger Frame)
A10 .	650 c.c.	,,	(Swinging Arm)

PRICE ADJUSTMENT

Owing to increased manufacturing costs it has been necessary for us to review our Spares Prices.

As from 1st April, 1955 the prices shown in this list are subject to a 10% increase.

A GROUP.

NEW COMPONENTS FOR 1954.

Model.	Part No.	Description.	Price. £	s.	d.
A7	67–8126	Petrol Tank	8	10	0
A7	65–8220	Petrol Tank Badge		9	6
A7	67–1061	Cylinder Head	9	0	0
A7	67–1070	Cylinder Barrel	7	5	0
A10	67–1065	Cylinder Head	10	0	0
A10	67–1074	Cylinder Barrel	7	5	0

All communications relating to Spare Parts or Repairs to Motor Cycles to be addressed to B.S.A. Motor Cycles Ltd. Service Department, Birmingham, 11

B.S.A. MOTOR CYCLES LTD.

Directors: Sir BERNARD DOCKER, K.B.E., J.P. (*Chairman*). J. LEEK, C.B.E. J. A. T. DICKINSON, O.B.E. H. J. SMITH

Registered Offices and Works - - - ARMOURY ROAD, BIRMINGHAM, 11

Telephones: BIRMINGHAM VICTORIA 2381 (30 lines) *Telegrams and Cables*: "SELMOTO, BIRMINGHAM"

Service, Spares and Repairs Department *Telephone*: VICtoria 2234 (6 lines) *Telegrams and Cables*: "SELSERV, BIRMINGHAM"

Contractors to Her Majesty's Government, the War Office, the Admiralty, the Post Office, the Colonial and Foreign Governments

MC655-5

Copyright B.S.A. Co. Ltd.

Printed in England *Oct.* 1954

'A' GROUP GENERAL INDEX

	pages
Air Cleaners	31, 46, 48
Battery Carrier	31, 46
Bumper Bars (Front)	59, 61
Bumper Bars (Rear)	59, 61
Carburetters and Settings	86
Carrier	26, 61
Central Stand	26, 33
Chainguards	43, 50
Clutch and Chaincase	24
Colour Finishes	3
Dual Seat and Fittings	46, 53
Engine and Frame Markings	84
Engine (General)	10—17
Equipment (Electrical)	64
Equipment (Speedometers)	64
Exhaust Pipes	11
Footrests	26, 33
Frame and Fittings	25, 31
Front Fork and Fittings	35
Front Hub and Wheel Fittings	37, 39
Front Stand	43, 48, 50, 53
Gearbox and Control Parts	17, 21
Guarantee	4
Handlebars and Controls	46, 53
Handrail	61
Index (Numerical)	69, 81
Index (Sidecars)	82
Legshields	56, 58
Mudguards and Fittings (Front)	43, 48, 50, 53
Mudguards and Fittings (Rear)	43, 50
Oil Tank and Fittings	43, 50
Petrol Tank and Fittings	46, 48, 53
Pillion Footrests	26, 31
Pistons	85
Prop Stand	26, 31
Rear Brake Control	48, 53
Rear Hub and Wheel Fittings	37, 41
Rear Suspension	29, 33
Sidecar Chassis	67
Silencer and Fittings	43, 50
Spares and Repairs	4
Stockists	5—9
Toolbox and Fittings	43, 53
Tools and Sundries	62

SUFFIX NUMBERS TO BE USED TO IDENTIFY VARYING FINISHES FOR 'A' GROUP MOTOR CYCLES

/001	Cadmium
/003	Bright Chrome
/007	Black Enamel
/017	Chrome Plate, Black Lined Gold
/019	Chrome Plate, Matt Silver Lined Red
/021	Polished Aluminium
/024	Polychromatic Silver Beige
/026	Chrome Plate and Silver Beige Lined Red
/036	Maroon and Chrome Lined Gold
/037	Maroon only
/038	Metallic Green and Chrome Plate Lined Dark Green
/039	Metallic Green
/040	Dark Green
/041	Chrome Rim and Maroon Hub
/042	Chrome Rim and Dark Green Hub
/043	Chrome Rim and Beige Hub
/044	Chrome Rim and Black Hub

When ordering components with varying finishes, i.e., Petrol Tanks, Wheels, Rims, Brake Rods, Front Fork Oil Seal Holder — please state finish required by adding the appropriate suffix number to part number.

EXAMPLE. Petrol Tank

Metallic Green and Chrome Plate Lined Dark Green — 67 - 8104/038

SPARKING PLUGS

Champion Sparking Plugs Ltd., Feltham, Middlesex

ELECTRICAL EQUIPMENT

J. Lucas Ltd., Great King Street, Birmingham

SPEEDOMETERS

Smith's Motor Accessories, Cricklewood Works, London

SPARES AND REPAIRS

Please carry out the following in order to ensure prompt attention and correct execution of orders.

SPARES

1. Parts forwarded as patterns and all orders for spares should be addressed to **B.S.A. Motor Cycles Ltd., Service Department, Birmingham 11.**
2. When ordering parts the frame and engine numbers must be quoted. The former will be found stamped on the seat or the head tube lug and the latter on the nearside of the crankcase immediately below the cylinder base. It is essential that the component numbers of the parts required be clearly stated.
   IMPORTANT.—In quoting engine and frame numbers the full numbers, including prefix letters, MUST BE GIVEN.
3. To avoid delay orders for spare parts should be written on a separate order form or sheet of paper to correspondence on other matters.

REPAIRS

4. **All motor cycles, engines, sidecars, or components for repair, must be consigned to B.S.A. Motor Cycles Ltd., "Repairs," Montgomery Street, Birmingham 11.**
5. In cases where we are simply instructed to "overhaul," the machine or component will be entirely dismantled and all worn parts renewed, re-assembled and tested in a suitable manner.
6. When sending complete motor cycles to us such auxiliary accessories as windscreens, panniers, club badges, etc., also tools and inflator, should be removed, as they are liable to be damaged or lost in transit, for which we cannot accept liability.
7. **In the case of telephone enquiries relating to the repair of motor cycle or sidecar parts customers are requested to communicate with the Repairs Department. Telephone number: Birmingham Victoria 2234.**
8. It frequently happens that parts are forwarded to us which do not bear the sender's name and address. Care in this respect will prevent delay and annoyance.
9. All goods must be consigned to us carriage paid.
10. B.S.A. Motor Cycles Limited reserve the right to charge for all goods supplied at prices ruling at time of delivery.
11. It must be understood that when no Ledger Account is open with the Company orders must be accompanied by a remittance. At the same time instructions should be given as to the method of despatch (either post, passenger or goods train), and such charges should be included in the remittance. All cheques and Postal Orders should be made payable to B.S.A. Motor Cycles Limited.
12. Complaints relative to defects in tyres, saddles, and electrical equipment should be sent direct to the manufacturer of such articles as these goods are only guaranteed in accordance with the respective makers' warranty.

B.S.A. Motor Cycles Ltd. reserve the right to alter the designs or any constructional details of their manufactures at any time without giving notice.

COPY OF B.S.A. MOTOR CYCLE SPARE PARTS GUARANTEE

We give the following guarantee with B.S.A. Motor Cycle Spare Parts, instead of the guarantee implied by statute or otherwise, as to the quality or fitness of such parts for the purpose for which they are intended, any such implied guarantee being in all cases excluded, nor can any claim for consequential damages be entertained.

WE GUARANTEE, subject to the conditions mentioned below, that all precautions which are usual and reasonable have been taken by us to secure excellence of materials and workmanship, but this guarantee is to extend and be in force for six months only from the date of purchase, and the damages for which we make ourselves responsible under this guarantee are limited to the replacement of any part which may have proved defective.

WE UNDERTAKE, subject to the conditions mentioned below, to make good at any time within six months any defects in these respects. As motor cycles are easily liable to derangement by neglect or misuse, this guarantee does not apply to defects caused by wear and tear, misuse, or neglect. The term "misuse" shall include among others the following acts: The attaching of a sidecar to the motor cycle in such a manner as to cause damage or calculated to render the latter unsafe when ridden; the use of a motor cycle or a motor cycle and sidecar combined when carrying more persons or a greater weight than they were designed to bear.

REPAIRS AND RENOVATIONS GUARANTEE

Any B.S.A. motor cycle sent to us to be replated, re-enamelled, or repaired will be treated upon the same conditions as if it were a new motor cycle, *i.e.*, we guarantee that all precautions which are usual and reasonable have been taken by us to secure excellence of material and workmanship, such guarantee to extend and be in force for six months only from the time such work shall have been executed, and this guarantee is in lieu and in exclusion of any Common Law or statute warranty, and the damages recoverable are limited to the cost of any further work which may be necessary to amend and make good the work found to be defective.

CONDITIONS OF GUARANTEE

If a defective part should be found in our motor cycles it must be sent to our Service Department, carriage paid, and be accompanied by an intimation from the sender that he desires it repaired free of charge under our guarantee, and he must also furnish us at the same time with the number of the machine and engine, which will be found stamped on the seat or head tube lug and crankcase respectively, the name of the Dealer from whom he purchased, and the date of the purchase.

Failing compliance with the above no notice will be taken of anything which may arrive but such articles will lie here at the risk of the sender, and this guarantee or any implied guarantee shall not be enforceable.

We do not guarantee the specialities of other firms, such as tyres, electrical equipment, saddles, etc., or of any component part supplied to the order of the purchaser differing from our standard specifications, whether supplied with our motor cycles or otherwise.

THE TERM "AGENT"

We do not appoint agents for the sale of our Motor Cycles or other goods. We assign to Motor Cycle Dealers (styled "Regional" Dealers), who carry on business on their own account, areas in which they have the exclusive or other right to sell goods purchased from us. A Regional Dealer purchasing from us, or a Sub-Dealer purchasing from him, may, on our behalf (as our agent for the purpose only) give the guarantee printed above. Any such dealer is not authorised to advertise, incur any debts, or transact any business whatsoever on our account, nor is he authorised, so as to bind us to give any warranty or make any representation on our behalf or to sell subject to or with any conditions other than those contained in such guarantee.

LIST OF B.S.A. STOCKISTS

Save time and postage by contacting your nearest B.S.A. Stockist for B.S.A. Spare Parts, Spare Part Catalogues, Instruction Books, Transfers, etc. All B.S.A. Dealers carry stocks of B.S.A. Spare Parts but the following appointed Stockists maintain a comprehensive range.

Town.	*Name of Stockist.*	*Address.*	*Telephone No.*	*Telegraphic Address.*
Aberdeen	J. Dawson	24-26, Thistle Street	25556	
,,	George Cheyne (Cycles) Ltd.	147, Holburn Street	26027	Motobike, Aberdeen.
Aberystwyth	Gwalia Motor Co.	North Parade	525	
Accrington	W. Snape	379, Blackburn Road	4724	
Aldershot	Phillips Bros. (Aldershot) Ltd.	Birchett Road	1111/2	Phillips Cycles, Aldershot.
Alloa	J. G. Robertson	55-57, High Street	193	
Andover	Corbett & Ellis (Andover) Ltd.	Weyhill Road	2991	
Aylesbury	Eborn's Garage	44, Walton Street, Aylesbury	150	Eborn's, Aylesbury.
Banbury	Trinder Bros.	2 and 3, Broad Street	2546	
Barnsley	T. Garner & Son	Sheffield Road	2866	
Bedford	The Imperial Cycle Co.	58, St. Loyes	2374	
Belfast	W. J. Chambers	106 and 108, Donegall Pass	27253/4	Fastmote, Belfast.
Biggleswade	Bryants	25, 27, 72 and 74, Shortmead Street	3108	
Birkenhead	Bob Simister Ltd.	540, New Chester Road, Rock Ferry	Rock Ferry 1452	
Birmingham	County Cycle & Motor Co. Ltd.	266, Broad Street 104, Bath Row (Repairs) (*Closed Saturday*, 1 *p.m.*)	Midland 2671 Midland 2817	
,,	C. E. Cope & Sons Ltd.	481-487, Hagley Road, Edgbaston 17	Bearwood 2246/7	
,,	Shovelbottom's Ltd.	376, Ladypool Road, Sparkbrook 12	South 2212	
Blackburn	Shuttleworth & Geldart	15, Great Bolton Street	6678	
Blackpool	J. Hall & Son	102/6, Devonshire Road (*Opposite School*)	22130	
Bolton	Charlie Robinson	119 and 121, Higher Bridge Street	3931	
Boscombe (Bournemouth)	Craze Bros.	473 and 475, Christchurch Road	Boscombe 34063	
Bradford	C. Sidney Ltd.	107, Manningham Lane	29889	
Braunton	C. M. Ray	The Square	344	
Bridgwater	Anderson & Wall	18, St. Mary Street	2416	Anderson & Wall, Bridgwater.
Brighton	Redhill Motors (Brighton) Ltd.	104, North Road	5281	
Bristol	S. J. Fair Motors Ltd.	201/3, Cheltenham Road	46238	
Bromsgrove	Harold Tozer (Bromsgrove) Ltd.	110, Birmingham Road	3228	
Brynmawr	Jayne's Motors	Cymbach Garage	271	
Bury	Arthur Coyle (*Prop.* W. Hudson)	30/32, Walmersley Road	714	Coyle Motors, Bury.
Bury-St.-Edmunds	Barclay Motors	Kings Road Corner	2345	
Cambridge	King & Harper Ltd.	Milton Road Corner	55201	Motors, Cambridge.
Canterbury	Marcel Hallet	St. Dunstan's Street	3046	
Cardiff	Car Distributors (Cardiff) Ltd.	134-140, City Road	30022	
,,	Robert Bevan & Son	29/35, Castle Street	1808	
Carlisle	W. T. Tiffen & Son	Irishgate Brow	25024	Tiffen, Irishgate, Carlisle.
Carmarthen	W. Edwards & Sons (Carmarthen) Ltd.	Towy Garage	482/3	Edwards Garage, Carmarthen.
Castleford	Barrett's Motor Cycles	27-35, Aire Street	2983	

Town	*Name of Stockist.*	*Address.*	*Telephone No.*	*Telegraphic Address.*
Chapel-en-le-Frith	E. W. Bowers	129, Town End	144	
Chatham	Grays	14-16, High Street	4005	
Chelmsford	Hadlers Garage Ltd.	New Street	4844/5	Hadler, Chelmsford.
Cheltenham	Leslie Paynter	Bath Street	2887	Paynter's Garage, Bath Street, Cheltenham
Chester	Davies Bros.	34, Bridge Street	510	
Chichester	W. Goodridge & Co. Ltd.	East Street	2033	
Colchester	G.B.R. Motors Ltd.	63a, High Street	2632	
Colwyn Bay	Gilbert Emery	70/72, Abergele Road	2151	
Coventry	Coventry Motor Mart Ltd.	London Road	2146/7	Coventry Motor Mart.
Croydon	Godfreys Ltd.	228/234, London Road	Croydon 3641/2	Gofrabike, Croydon.
Dagenham (Essex)	Smith & Double	New Road	Rainham 3284/2786	
Dalton-in-Furness	H. Holme	Ulverston Road	25	
Darlington	The Duplex Motor & Cycle Co. Ltd.	10-16, Grange Road	Darlington 2071	Duplex, Darlington.
,,	White Bros.	205/9, Northgate	2379	
Dartford	Schweizo Bros.	177, Lowfield Street	4279	
Derby	Ingle's Provincial Garages Ltd.	Walbrook Road	45289	
Doncaster	W. Cusworth (Doncaster) Ltd.	7, Hall Gate	4594	
Dorchester	Tilleys	31, South Street	367	Motors, Dorchester.
Douglas (I.O.M.)	Gilbert Harding	18, Duke Street	Douglas 170	
Dudley	Chas. E. Cope & Sons Ltd.	193, High Street	Dudley 3464/5/6	
,,	James Parkes & Sons	7, King Street	Dudley 2889	
Dundee	George McLean Ltd.	Riverside Drive	5087	Vehicles, Dundee.
Dunstable	B. G. England (Dunstable) Ltd.	Halfmoon Hill, London Road	843/4	
Eastbourne	Hurrey Woodham	118, Seaside	756	Jempsons, Eastbourne
Edinburgh	J. R. Alexander & Co. Ltd.	10/14, Lothian Road	21176	Motor Cycles, Edinburgh.
Elgin	Farquharsons	55/57, High Street	7188	Elgin 7188
Enfield	D. J. Shepherd & Co. (Enfield) Ltd.	434/6, Hertford Road, Enfield Highway	Howard 1631	
Exeter	P. Pike & Co. Ltd.	Alphington Street	3061	Piko, Exeter.
Frome	Difazio & Bishop	25, Catherine Street	2913	
Gateshead, 8	O. Carmichael & Son	75, 83 and 87, High Street West	71815	
Glasgow	Bell Bros. (H.P.) Ltd.	215/223, St. Georges Road	Douglas 6414	Douglas 6414 Glasgow.
,,	J. R. Alexander & Co. Ltd.	264-280, Great Western Road	Douglas 3802/3/4	Alex Moto, Glasgow.
Gloucester	Harpers Garage	23a, Worcester Street	23187	Gloucester 23187
Grimsby	H. J. Cresswell & Sons Ltd.	13/15, Osborne Street	2220	
Guernsey	Millard & Co. Ltd.	Victoria Road	777	Millard Motors, Guernsey
Guildford	E. Pascall (Guildford) Ltd.	11/12, Woodridbge Road	Guildford 2274/5/6	
Harrogate	H. Aclam (Prop. H. Baynes)	11, Bower Road	5125	
Harrow	E. T. Pink (Harrow) Ltd.	Station Road	0044/5	Pink, Harrow.
Haywards Heath	Dinnages Garages Ltd.	Wivelsfield Road	1146	
Hereford	A. Kear & Co.	52b, Commercial Street	2239	Kear, Hereford.
Holbeach, Lincs.	G. Woodman	34, Fleet Street	3221	
Hove	Bradshaws	5/6, Western Road	Hove 35252/3	

Town	*Name of Stockist.*	*Address*	*Telephone No.*	*Telegraphic Address*
Huddersfield	Earnshaw	Manchester Road	1232	
Hull	Browns (Witham) Ltd.	47/49, Witham	33990/9	
,,	Jordan & Co. (Hull) Ltd.	Story Street	36809	Gumption, Hull.
Ilford	Smith & Double	Cranbrook Road	Valentine 3109	
Ipswich	Revetts Ltd.	Clarkson Street	2822	
Jersey	Colebrooks (Peter Perrio)	1 and 11, New Street	Central 642	Colebrooks, Jersey.
Keighley	Dick Ratcliffe	Coldshaw Garage, Haworth	Haworth 3133	
Kendal	Tom O'Loughlin	66, Stricklandgate	315	
Kirkcaldy	County Motors (Kirkcaldy) Ltd.	Junction Road	Dysart 5631	
Lancaster	Pye Motors Ltd.	Parliament Street	828	
Launceston	J. Wooldridge & Son	Western Road	21	Wooldridge, Launceston.
Leeds, 1	Watson-Cairns & Co. Ltd.	Lower Briggate	23379	Watson-Cairns, Briggate, Leeds.
Leicester	E. W. Campion & Son Ltd.	Welford Place	58054	
Lincoln	Wests (Lincoln) Ltd.	116, High Street	10762-3-4	
Liverpool	Bee Cycle & Motor Co. Ltd.	17-19, Renshaw Street	Royal 6375/6	Bee Cycles, Liverpool.
,,	Cundles	41 and 61, Byrom Street	Central 4148	Cundles, Central 4148.
Llawhaden	James Bowen & Sons	Llawhaden, near Narberth, Pem.	Llawhaden 6	
London, W.1	Godfreys Ltd.	208, Great Portland Street	Euston 4632/4	Gofrabike, Forgate, London.
,, N.W.1	J. Grose Ltd.	379-381, Euston Road	Euston 5231	
,, W.5	Kays of Ealing Ltd.	8-10, Bond Street	Ealing 2813	Sparesokay, Ealux, London.
,, S.E.13	F. Parks & Son Ltd.	404, High Street, Lewisham	Lee Green 0535	
,, E.8	Eleanor Motors	265/7/9, Mare Street	Amherst 5134	
,, E.7	Godfreys (Proprietors of Lovetts)	418, Romford Road, Forest Gate	Grangewood 1234	
,, E.6	Godfreys (Proprietors of Lovetts)	220 Barking Road, East Ham	Grangewood 0933	
,, N.12	George Grose Ltd.	834, High Road, Finchley	Hillside 2149	
,, N.12	Glanfield Lawrence Ltd.	Junction Great North Road and North Circular Road	Finchley 0091	Glanfin, Norphone, London.
,, S.E.11	Writers Ltd.	161/5, Kennington Lane	Reliance 1362	
,, S.W.11	Owen Bros.	19, Battersea Rise, Clapham Junction	Battersea 7816/7	
,, S.W.6	Claude Rye Ltd.	897/921, Fulham Road, Fulham	Renown 4246/7/8	Ryebikes, Walgreen, London.
,, S.W.9	Pride & Clarke Ltd.	Stockwell Road,	Brixton 6251	
,, W.12	Turners Stores	81-83, Goldhawk Road, Shepherd's Bush	Shepherds Bush 2436	
,, W.3	Whitby's of Acton Ltd.	273, The Vale, Acton	Shepherds Bush 5355/6	
,, S.E.18	Cleares	1 & 125, High Street, Woolwich	Woolwich 0174	
,, S.E.15	West End Motors Ltd.	171, High Street, Peckham	Newcross 2589	
,, N.W.10	Slocombes Ltd.	269, Neasden Lane, Neasden		Gladstone 2088-0508
,, N.15	Godfreys	94 & 96, High Road, South Tottenham	STA 9960	
Lowestoft	R. Wright	67-69, London Road South	645	

Town.	*Name of Stockist.*	*Address.*	*Telephone No.*	*Telegraphic Address.*
Maidstone ..	Redhill Motors (Maidstone) Ltd.	The Broadway	3096	
Manchester ..	Colmore Depot Ltd.	17-18, Watson Street	Blackfriars 3322	
,, ...	Tom Davies (Motors) Ltd. ..	233, Deansgate ..	Blackfrairs 0681	
,, ...	Fred Fearnley Ltd.	692-4, Ashton Old Road	East 1445/6	Fernbike, Manchester.
,, ...	Webb & Waitt Ltd., Stretford Garage	Chester Road, Stretford	Longford 2223	Courteous, Stretford.
Mansfield ..	Henstocks..	128, Chesterfield Road North ..	329	Henstock 329 Mansfield.
Middlesbrough ..	J. T. Dickinson (Middlesbrough) Ltd.	160-162, Lindthorpe Road ..	3861	
Neath	Fred Rist	16, Windsor Road ..	Neath 780	
Newcastle-on-Tyne	Dene (Newcastle) Motor Co. Ltd.	Haymarket	21837	Ened, Newcastle-on-Tyne.
Newton Abbott ..	J. E. Green & Co.	87, Queen Street	653	
Newport (Mon.) ..	R. J. Ware & Sons	69, Commercial Street	66206	
Newton Stewart ..	Associated Car Sales Co. Ltd. ..	Albert Street, Newton Stewart		
Northampton ..	P. C. Spokes & Son Ltd. ..	1, Henry Street	1160	
Norwich	Chapmans (Norwich) Ltd. ..	38-42, Duke Street	24727	
Nottingham ..	E. W. Campion & Son Ltd. ..	Station Street	52961	
Oswestry	Roy Evans	Willow Street	201	
Oxford	H. F. Temple	69, High Street, St. Thomas ..	2485	
Parkstone	Bob Foster	472/4, Ashley Road	68	
Perth	M. Shaw & Sons	143, High Street	483	
Peterborough ..	Burrows Bros.	55-57, Westgate	2154	
Plymouth	P. Pike & Co. Ltd.	46, Union Street	Plymouth 3108	Piko, Plymouth
Pontardulais ..	T. Griffiths	Forest Garage ..	Pontardulais 323	
Portsmouth ..	Jenkins & Purser Ltd.	277-281, Copnor Road	5722	
,, ...	Percy Kiln Ltd.	65/67, Elm Grove, Southsea	Portsmouth 4793	
,, ...	Glanfield Lawrence	147/157, Fratton Road	74331	
Preston	Loxham's Garages Ltd. ..	Central Garage, Charnley Street, Fishergate	Sales Dept. 4242 Service Dept. 4243	Loxhams, Preston.
Pulborough ..	Gray & Rowsell	Bury Gate	Bury 4	
Radcliffe	Will Lord	115, Blackburn Street	2002	
Reading	Fortescue Bros. Ltd.	1-2, West Street	4143	4143 Reading.
,, ...	Phillips & Bloomfield Motors Ltd.	10/24, South Street	2635	
Redhill	The Redhill Motor & Cycle Works Ltd.	50, Brighton Road	327	
Romford	G. H. Wilson	George Street	2660	
Rotherham ..	Ernest Cross	55, Drummond Street	Rotherham 3987	
Salisbury	Pankhurst (Weymouth) Ltd. ..	78 Exeter Street	5222/3	
Scarborough ..	E. Andrew	Roscoe Street ..	Scarborough 1857	
Sevenoaks ..	Angus Motor Cycles	Station Parade	3338	
Sheffield	Walter Wragg Ltd.	Stanley Works, Wellington Street	26098	26098 Sheffield.
Shetland	Thomson's Garage	Esplanade, Lerwick	85	Thomson's Garage, Lerwick.
Shrewsbury ..	J. R. Meredith	Coleham Head	4533	
Sittingbourne ..	Scoones' Garage	9, West Street	66	Scoones, Sittingbourne.
Slough	Sid Moram	Wexham Corner, High Street ..	23767	

Town.	*Name of Stockist.*	*Address.*	*Telephone No.*	*Telegraphic Address.*
Skipton	Craven Motor Co.	Caroline Square	221	Skipton 221
Southampton	Alec Bennett Ltd.	152, Portswood Road	54081-2-3	
Southport	H. F. Brockbank	62, King Street	5054	
St. Austell	Kellaway (Cycles & Motors) Ltd.	34, South Street	102	
St. Helens	Geoff. Duke Ltd.	Greenfield Road Garage	3918	
St, Ives, Hunts.	Hallens Ltd,	The Broadway	St. Ives 3071	Hallens, St. Ives.
Stockport	Theobold & Coppack	6, Chestergate	2843	Theobald Coppack, Stockport.
Stoke-on-Trent	J. & N. Bassett	Howards Place, Shelton	2890	
Sunderland	Dunns Garage (Sunderland) Ltd.	Wheatsheaf Corner	4994	
Sutton-in-Ashfield	W. Henstock	Forest Street Garage	90	Henstock, 90, Sutton-in-Ashfield.
Swansea	Handel Davies Ltd.	213, Oxford Street	2956	
Swindon	Easters Garage	5/8, Manchester Road	2788	
Taunton	W. P. Edwards (Motors) Ltd.	58, East Street	2943	Edwards, Motor Cycles, Taunton.
Thames Ditton	Comerfords Ltd.	Portsmouth Road	Emberbrook 2323/4	
Thetford	W. & G. Lambert Ltd.	Castle Street	2217	
Torquay	P. H. Sharam Ltd.	244/6, Union Street	4184 and 7255	
Tunbridge Wells	G. E. Tunbridge	21, London Road	416	Motors, Tunbridge Wells.
Twickenham	C. A. Blay	192, Heath Road	Popesgrove 2103 and 1435	
Uxbridge	Miles Motors Ltd.	60, High Street	Uxbridge 125	
Wakefield	Parkinson (Wakefield) Ltd.	Ings Road	2087	
Walsall	The Motor Cycle Mart	12, Ablewell Street	3363	
Warrington	Jack Frodsham Ltd.	37a, Winnick Street	471	
Watford	Lloyd Cooper & Co.	61, Queen's Road	2125	
Westcliff-on-Sea	J. Costin & Sons	233-5-7, London Road	Southend 2215	
Weston-super-Mare	Wyvern's of Weston Ltd.	47, Drove Road	3409	Wyvern's, Weston-super-Mare.
Weybridge	W. L. Lewis & Sons	51, Church Street	210	
Weymouth	Tilleys	9, Frederick Place	72	
Winchester	Winchester Cycle & Motor Co.	Jewry Street	2728	
Wolverhampton	C. E. Cope & Sons Ltd.	168-9, Stafford Street	24605/6	
Worcester	W. J. Bladder & Son	52, Sidbury	2438	Bladder, Sidbury, Worcester.
Worthing	Wheatlands	56, Broadwater Street West	1224	
Yeovil	The Yeovil Motor Mart	Hendford	267	Motor Mart, Yeovil.
York	C. S. Russell (York) Ltd.	Lawrence Street	3793	Russell, Lawrence Street, York.

Plate 1

ENGINE—'A' GROUP (PLUNGER AND SWINGING ARM FRAMES)

Plate Ref. Number	Model	Part No.	Description	Number per set.
1	'A' Group	29–410	Valve spring cotter (split) (halves)	8
2	'A' Group	67–34	Valve spring collar (top)	4
3	'A' Group	67–440	Valve spring (inner)	4
4	'A' Group	67–439	Valve spring (outer)	4
5	'A' Group	67–31	Valve guide (inlet and exhaust)	4
	Shooting Star only	67–1110	Valve guide (inlet and exhaust)	4
6	'A' Group	67–33	Valve spring cup (inlet and exhaust)	4
7	A7	67–394	Valve (inlet)	2
	A10	67–323	Valve (inlet)	2
	Star Twin and Shooting Star	67–531	Valve (inlet)	2
8	'A' Group	67–279	Rocker box inspection cover joint washer	2
9	'A' Group	65–2153	Rocker box inspection cover stud nut	8
10	'A' Group	24–978	Rocker box inspection cover nut washer	8
11	'A' Group	67–263	Rocker box inspection cover	2
12	'A' Group	65–317	Rocker oil feed pipe banjo screw	2
13	'A' Group (Swinging Arm)	42–48	Rocker oil feed pipe complete	1
	'A' Group (Plunger type)	67–450	Rocker oil feed pipe complete	1
14	'A' Group	15–203	Rocker oil feed pipe union washer (top)	2
15	'A' Group (Plunger type)	67–259	Rocker box with studs	1
16	'A' Group	24–8784	Rocker box bolt washer	4
17	'A' Group	67–261	Rocker box bolt (long)	4
18	'A' Group	67–277	Rocker box joint washer (small)	2
19	A7	67–395	Valve (Exhaust)	2
	A10	67–324	Valve (exhaust)	2
	Star Twin and Shooting Star	67–532	Valve (exhaust)	2
20	'A' Group	67–64	Valve rocker spindle	2
21	'A' Group	67–60	Valve rocker thrust washer	6
22	'A' Group	67–62	Valve rocker spindle washer (spring)	4
23	'A' Group	67–266	Exhaust valve rocker (N/S)	1
24	'A' Group	67–56	Rocker adjusting screw	4
25	'A' Group	24–563	Valve rocker adjusting nut	4
26	'A' Group	67–267	Exhaust valve rocker (O/S)	1
27	'A' Group	65–311	Valve rocker spindle nut	2
28	'A' Group	36–481	Valve rocker spindle washer	2
29	'A' Group	67–61	Valve rocker thrust washer	2
30	A7 and Star Twin (Plunger)	67–2675	Exhaust pipe (O/S)	1
	A10 (Plunger)	67–2720	Exhaust pipe (O/S)	1
	A7 and Shooting Star (Swinging Arm)	42–2761	Exhaust pipe (O/S)	1
	A10 Swinging Arm	42–2766	Exhaust pipe (O/S)	1
31	'A' Group	67–265	Valve rocker (inlet) (O/S)	1
32	A7 and Star Twin (Plunger)	67–2679	Exhaust pipe (N/S)	1
	A10 (Plunger)	67–2722	Exhaust pipe (N/S)	1
33	'A' Group	67–264	Valve rocker (inlet) (N/S)	1
34	'A' Group (Plunger)	67–347	Rocker box and steady stay stud	2
35	'A' Group (Plunger)	67–346	Engine steady stay	2
36	'A' Group (Plunger)	24–6040	Rocker box steady stay stud nut	2
37	'A' Group (Plunger)	36–382	Rocker box steady stay nut washer	6
38	'A' Group (Plunger)	2–49	Rocker box stud nut	2
39	'A' Group (Shooting Star exc.)	67–254	Cylinder and head bolt	4
	Shooting Star	67–1115	Cylinder head bolt (medium)	4
	Shooting Star	67–1116	Cylinder head bolt (long)	2
40	'A' Group (Shooting Star exc.)	67–258	Cylinder head bolt (medium)	2
41	A7 (Plunger and Swinging Arm)	67–1061	Cylinder head with fixed fittings	1
	A10 (Plunger and Swinging Arm)	67–1065	Cylinder head with fixed fittings	1
	Star Twin	67–1063	Cylinder head with fixed fittings	1
42	'A' Group	21–5102	Exhaust pipe finned collar nut	2
43	'A' Group	29–541	Exhaust pipe finned collar nut washer	2
44	'A' Group	67–2694	Exhaust pipe finned collar	2
45	'A' Group	21–6187	Exhaust pipe finned collar screw	2
46	'A' Group	65–213	Sparking plug cover	2
47	A7 and A10	65–114	Sparking plug	2
	A7 Star Twin	67–529	Sparking plug	2
	Shooting Star	65–1340	Sparking plug	2
48	'A' Group	66–102	Sparking plug washer	2
49	A7 and Star Twin (Plunger)	67–382	Cylinder head joint washer	1
	A7 and Shooting Star (Swinging Arm)	67–382	Cylinder head joint washer	1
	'A' Group	67–255	Cylinder head joint washer	1
50	'A' Group	67–256	Cylinder barrel base washer	1

Plate 1 ENGINE 'A' GROUP (PLUNGER AND SWINGING ARM FRAMES)

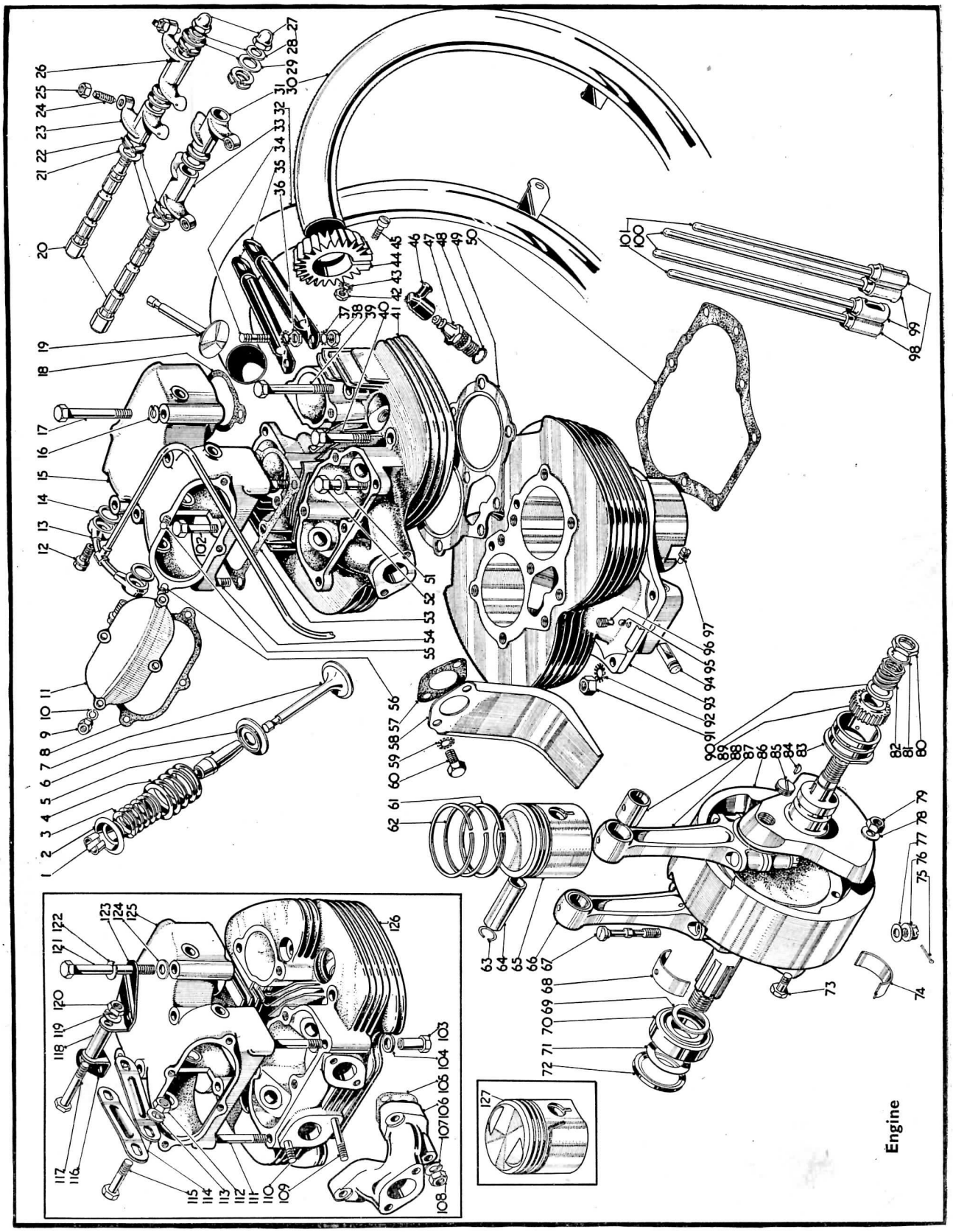

Plate 1—*continued*

ENGINE—'A' GROUP (PLUNGER AND SWINGING ARM FRAMES)

Plate Ref. Number.	Model	Part No.	Description	Number per set.
51	'A' Group	2–2138	Cylinder head bolt washer	9
52	A7, A10 and Star Twin (Plunger)	67–283	Cylinder head bolt (short)	3
	A7, A10 (Swinging Arm)	67–283	Cylinder head bolt (short)	3
	Shooting Star	67–1114	Cylinder head bolt (short)	3
53	'A' Group	67–278	Rocker box joint washer	1
54	'A' Group (Plunger)	67–1245	Rocker box stud	2
	A7, A10 (Swinging Arm)	67–1245	Rocker box stud	4
55	'A' Group	67–343	Rocker box cover stud	1
56	'A' Group	67–280	Rocker box inspection cover stud	7
57	A7	65–1162	Carburetter joint washer	3
	A10, Star Twin (Plunger)	65–1232	Carburetter joint washer	3
	A10, Shooting Star (Swinging Arm).	65–1232	Carburetter joint washer	3
58	A7 and A10	67–120	Carburetter drip shield	1
	Star Twin and Shooting Star	67–527	Carburetter drip shield	1
59	'A' Group	36–382	Carburetter drip shield fixing bolt washer	2
60	'A' Group	2–129	Carburetter fixing bolt	2
61	A7 and Star Twin (Plunger)	67–410	Scraper ring	2
	A7 and Shooting Star (Swinging Arm).	67–410	Scraper ring	2
	A10	67–314	Scraper ring	2
62	A7 and Star Twin (Plunger)	67–407	Compression ring	4
	A7 and Shooting Star (Swinging Arm).	67–407	Compression ring	4
	A10	67–311	Compression ring	4
63	A7 and Star Twin (Plunger)	67–101	Gudgeon pin circlip	4
	A7 and Shooting Star (Swing-Arm).	67–101	Gudgeon pin circlip	4
	A10	66–954	Gudgeon pin circlip	4
64	A7 and Star Twin (Plunger)	67–392	Gudgeon pin	2
	A7 and Shooting Star (Swinging Arm).	67–392	Gudgeon pin	2
	A10	65–440	Gudgeon pin	2
65	A7	67–460	Piston complete	2
	A10	67–423	Piston complete	2
	Star Twin and Shooting Star	67–533	Piston complete (7.25 to 1 C.R.)	2
66	A7, Star Twin and Shooting Star	67–386	Connecting rod with bushes, bolts and nuts (Drive side)	1
	A10	67–317	Connecting rod with bushes, bolts and nuts (Drive side)	1
67	'A' Group	67–1033	Connecting rod bolt	4
68	'A' Group	67–320	Connecting rod big end bush (Drilled) (halves)	1
69	'A' Group	67–671	Crankshaft shim (.005″)	As reqd.
	'A' Group	67–672	Crankshaft shim (.010″)	As reqd.
70	'A' Group	67–670	Crankcase roller bearing	1
71	'A' Group	67–2056	Engine sprocket alignment shim (.005″)	As reqd.
	'A' Group	67–2057	Engine sprocket alignment shim (.010″)	As reqd.
	'A' Group	67–2058	Engine sprocket alignment shim (.030″)	As reqd.
72	'A' Group	67–674	Crankshaft oil seal	1
73	'A' Group	67–301	Flywheel bolt	6
74	'A' Group	67–226	Big end bush (halves) (not drilled)	3
75	'A' Group	35–703	Connecting rod bolt split pin	4
76	'A' Group	67–1034	Connecting rod bolt nut	4
77	'A' Group	67–297	Connecting rod bolt washer	4
78	'A' Group	15–5155	Flywheel bolt nut washer	6
79	'A' Group	67–302	Flywheel bolt nut	6
80	'A' Group	67–643	Crankshaft nut	1
81	'A' Group	67–644	Crankshaft nut locking washer	1
82	'A' Group	67–642	Crankshaft pump gear	1
83	'A' Group	67–648	Crankshaft bush (Gear side)	1
84	'A' Group	15–40	Crankshaft pinion gear key	1
85	'A' Group	65–615	Crankshaft oil hole grub screw	2
86	A7, Star Twin and Shooting Star	67–384	Crankshaft and flywheel assembled	1
	A10	67–664	Crankshaft and flywheel assembled	1
87	A7, Star Twin and Shooting Star	67–389	Connecting rod with bushes, bolts and nuts (Gear side)	1
	A10	67–268	Connecting rod with bushes, bolts and nuts (Gear side)	1
88	A7, Star Twin and Shooting Star	67–393	Gudgeon pin bush	2
	A10	67–298	Gudgeon pin bush	2
89	'A' Group	67–339	Crankshaft pinion	1
90	'A' Group	67–645	Crankshaft pump gear washer	1
91	'A' Group	24–5160	Crankcase and cylinder barrel stud nut	9
92	'A' Group	36–382	Crankcase and cylinder barrel stud washer	9

Plate 1—*continued*

ENGINE—'A' GROUP (PLUNGER AND SWINGING ARM FRAMES)

Plate Ref. Number	Model	Part No.	Description	Number per set.
93	A7, Star Twin and Shooting Star	67–1070	Cylinder barrel	1
	A10	67–1074	Cylinder barrel	1
94	'A' Group	67–331	Tappet locating pin	1
95	'A' Group	$\frac{3}{16}$" diam.	Tappet locating pin ball	1
96	'A' Group	67–276	Tappet securing screw	1
97	'A' Group	67–299	Tappet retaining screw	2
98	'A' Group	67–332	Inlet tappet	2
99	'A' Group	67–333	Exhaust tappet	2
100	A7, Star Twin and Shooting Star	67–398	Exhaust valve push rod	2
	A10	67–362	Exhaust valve push rod	2
101	A7, Star Twin and Shooting Star	67–396	Inlet valve push rod	2
	A10	67–360	Inlet valve push rod	2
102	'A' Group	15–1355	Rocker box bolt	1
103	Shooting Star	67–1118	Rocker box and cylinder head stud nut (Rear)	2
104	Shooting Star	29–7796	Rocker box stud washer	4
105	Shooting Star	67–1120	Induction pipe joint washer	2
106	Shooting Star	67–1112	Induction pipe	1
107	Shooting Star	24–8784	Induction pipe stud washer	4
108	Shooting Star	2–49	Induction pipe stud nut	4
109	Shooting Star	67–1119	Induction pipe stud (bottom)	2
110	Shooting Star	67–1245	Induction pipe stud (top)	2
111	Shooting Star	67–1117	Rocker box stud	4
112	'A' Group Swinging Arm	24–6040	Engine steady bracket and frame bolt nut	1
113	'A' Group Swinging Arm	24–8784	Engine steady bracket and frame bolt washer	1
114	'A' Group Swinging Arm	42–55	Engine steady stay	2
115	'A' Group Swinging Arm	15–1355	Engine steady bracket and frame bolt	1
116	'A' Group Swinging Arm	42–52	Engine steady bracket (L/H)	1
117	'A' Group Swinging Arm	42–56	Engine steady bracket bolt	1
118	'A' Group Swinging Arm	42–54	Engine steady bracket distance piece	1
119	'A' Group Swinging Arm	24–8784	Engine steady bracket bolt washer	1
120	'A' Group Swinging Arm	24–6040	Engine steady bracket bolt nut	1
121	'A' Group Swinging Arm	42–62	Rocker box bolt (long)	4
122	'A' Group Swinging Arm	24–8784	Rocker box bolt washer	5
123	'A' Group Swinging Arm	42–53	Engine steady bracket (R/H)	1
124	'A' Group Swinging Arm	2–923	Engine steady bracket and rocker box washer	4
125	'A' Group Swinging Arm	42–63	Rocker box with studs	1
126	Shooting Star	67–1101	Cylinder head with fixed fittings	1
127	Shooting Star	67–566	Piston complete (8 to 1 C.R.)	2

Plate 2

ENGINE—'A' GROUP (PLUNGER AND SWINGING ARM FRAMES)

Plate Ref. Number.	Model	Part No.	Description	Number per set.
1	'A' Group	35–709	Cush drive bearing nut split pin	1
2	'A' Group Swinging Arm	67–1098	Cush drive nut	1
	A Group Swinging Arm	67–1137	Cush drive nut (1955 models)	1
3	'A' Group Swinging Arm	67–2062	Cush drive spring	1
	'A' Group Swinging Arm	67–1136	Cush drive spring (1955 models)	1
4	'A' Group Swinging Arm	15–1555	Cush drive sleeve	1
	'A' Group Swinging Arm	67–1135	Cush drive sleeve (1955 models)	1
5	A7 and Shooting Star Swinging Arm.	15–1566	Engine sprocket (18T)	1
	A7 and Shooting Star Swinging Arm.	67–1132	Engine sprocket (18T) (1955 models)	1
	A10 Swinging Arm	15–1560	Engine sprocket (21T)	1
	A10 Swinging Arm	67–1133	Engine sprocket (21T) (1955 models)	1
6	'A' Group Swinging Arm	67–1097	Cush drive bearing	1
7	'A' Group	67–1259	Magneto fixing nut (long)	1
8	'A' Group	67–1258	Magneto joint washer	1
9	'A' Group	24–5160	Magneto fixing nut	2
10	'A' Group	36–382	Magneto fixing nut washer (shakeproof)	3

Plate 2 ENGINE 'A' GROUP (PLUNGER AND SWINGING ARM FRAMES)

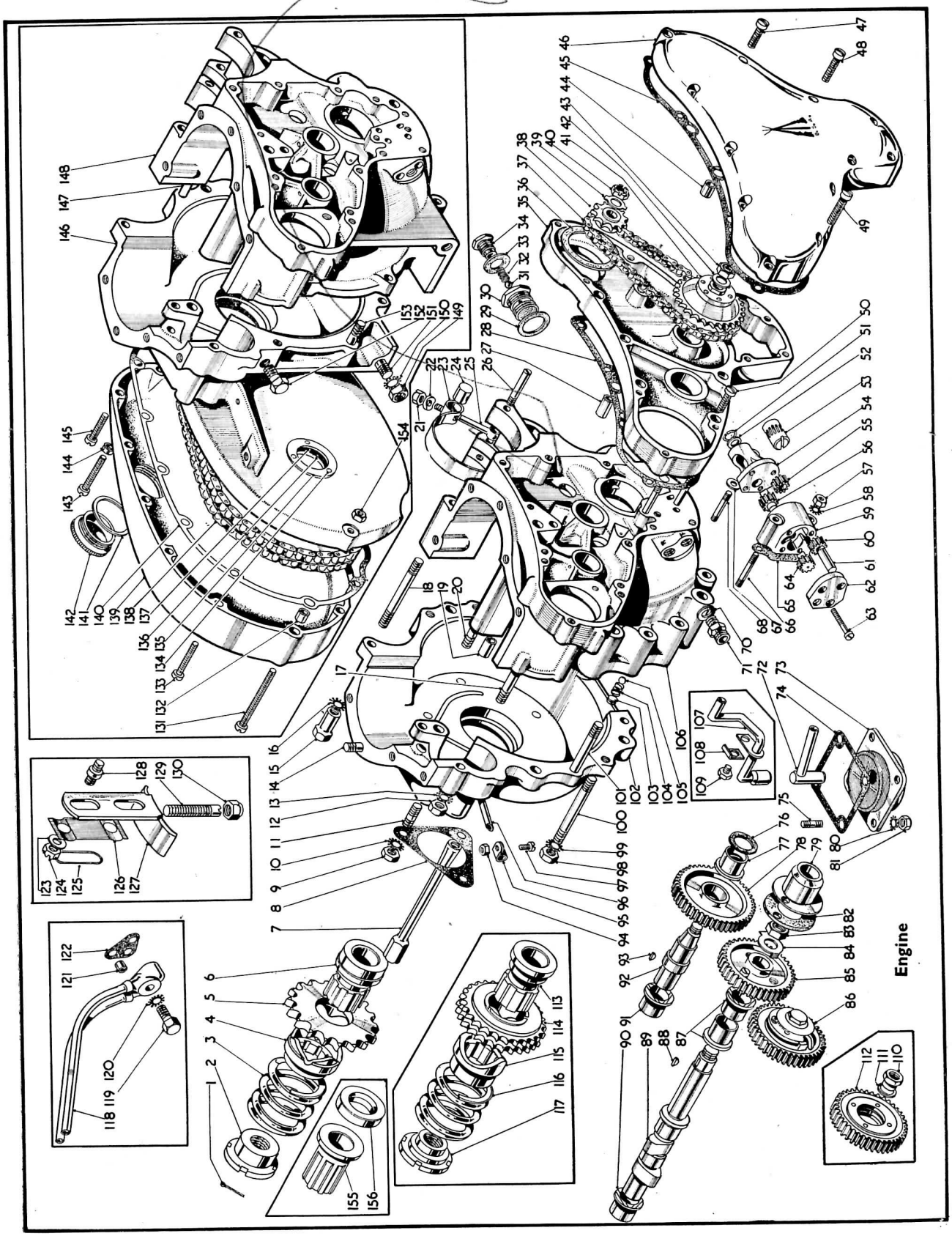

Plate 2—*continued*

ENGINE—'A' GROUP (PLUNGER AND SWINGING ARM FRAMES)

Plate Ref. Number	Model	Part No.	Description	Number per set
11	'A' Group	67–1245	Magneto fixing stud	3
12	'A' Group	2–2395	Crankcase connecting stud nut (top), (rear)	1
13	'A' Group	29–541	Crankcase connecting stud washer (shakeproof)	1
14	'A' Group	67–74	Cylinder barrel fixing stud	9
15	'A' Group	67–1292	Crankcase connecting bolt nut (top)	1
16	'A' Group	36–382	Crankcase connecting bolt washer (top)	1
17	'A' Group	67–355	Crankcase connecting stud (top) (rear)	1
18	'A' Group	67–350	Crankcase engine plate connecting stud	3
19	'A' Group	67–1236	Crankcase dowel	1
20	'A' Group	67–74	Crankcase connecting stud	1
21	'A' Group	2–833	Dynamo strap eye bolt nut	1
22	'A' Group	29–4662	Dynamo strap eye bolt saddle washer	1
23	'A' Group	67–1876	Dynamo strap	1
24	'A' Group	65–2352	Dynamo strap plug	1
25	'A' Group	29–2203	Dynamo strap eye bolt	1
26	'A' Group	67–353	Dynamo strap stud	2
27	'A' Group	27–1589	Crankcase and inner timing cover dowel	2
28	'A' Group	67–281	Inner timing cover joint washer	1
29	'A' Group	67–1499	Oil release valve washer (fibre)	1
30	'A' Group	67–1503	Oil release valve body complete	1
31	'A' Group	$\frac{5}{16}''$ diam.	Oil release valve ball	1
32	'A' Group	67–1496	Oil release valve spring	1
33	'A' Group	67–1498	Oil release valve body plug washer	1
34	'A' Group	67–1505	Oil release valve body plug	1
35	'A' Group	67–284	Inner timing cover complete	1
36	'A' Group	19–1429	Dynamo packing washer	1
37	'A' Group	67–296	Dynamo driving chain	1
38	'A' Group	67–727	Dynamo driven sprocket (11T)	1
39	'A' Group	67–729	Dynamo sprocket lock washer	1
40	'A' Group	19–1473	Dynamo sprocket nut	1
41	'A' Group	67–721	Dynamo driving sprocket	1
42	'A' Group	35–4224	Dynamo driving sprocket lock washer	1
43	'A' Group	2–449	Dynamo driving sprocket nut	1
44	'A' Group	66–3074	Outer timing cover dowel	2
45	'A' Group	67–282	Outer timing cover joint washer	1
46	'A' Group	67–287	Outer timing cover	1
47	'A' Group	67–133	Outer timing cover screw	3
48	'A' Group	67–132	Outer timing cover screw (long)	4
49	'A' Group	65–3063	Outer timing cover screw	5
50	'A' Group	67–133	Inner timing cover screw	4
51	'A' Group	67–1390	Oil pump driving spindle spring ring	1
52	'A' Group	2–3525	Oil pump driving spindle washer	1
53	'A' Group	67–1389	Oil pump driving spindle	1
54	'A' Group	67–1388	Oil pump driving spindle housing	1
55	'A' Group	67–1384	Oil pump feed gear (driven)	1
56	'A' Group	67–1383	Oil pump feed gear (driver)	1
57	'A' Group	2–51	Oil pump fixing nut	3
58	'A' Group	29–541	Oil pump fixing nut washer (shakeproof)	3
59	'A' Group	67–1382	Oil pump body	1
60	'A' Group	67–1386	Oil pump scavenge gear (driven)	1
61	'A' Group	67–1387	Oil pump scavenge gear spindle (driven)	1
62	'A' Group	67–1391	Oil pump end plate	1
63	'A' Group	67–1392	Oil pump end plate screw	4
64	'A' Group	67–1385	Oil pump scavenge gear (driver)	1
65	'A' Group	67–1393	Oil pump body joint washer	1
66	'A' Group	67–1395	Oil pump fixing stud (long)	2
67	'A' Group	67–1394	Oil pump body joint washer (small)	1
68	'A' Group	67–1396	Oil pump fixing stud (short)	1
70	'A' Group Swinging Arm	66–1683	Oil pipe crankcase pipe washer (fibre)	2
71	'A' Group Swinging Arm	65–2252	Oil pipe crankcase pipe adaptor	2
72	'A' Group Swinging Arm	67–1093	Crankcase scavenge pipe complete	1
73	'A' Group	67–1285	Scavenge cover complete	1
74	'A' Group	67–1288	Scavenge cover joint washer	1
75	'A' Group	31–222	Scavenge cover fixing stud	4
76	'A' Group	67–708	Idler pinion spindle oil seal	1
77	'A' Group	67–286	Idler pinion spindle bush	1
78	'A' Group	67–335	Idler pinion complete	1
79	'A' Group	67–130	Crankcase breather	1
80	'A' Group	29–541	Scavenge cover fixing nut washer	4
81	'A' Group	2–51	Scavenge cover fixing stud nut	4

Plate 2—*continued* ENGINE—'A' GROUP (PLUNGER AND SWINGING ARM FRAMES)

Plate Ref. Number	Model	Part No.	Description	Number per set.
82	'A' Group	67–134	Crankcase breather outer seal ($\frac{1}{8}''$)	1
	'A' Group	67–135	Crankcase breather outer seal ($\frac{5}{32}''$)	As reqd.
	'A' Group	67–136	Crankcase breather outer seal ($\frac{3}{16}''$)	As reqd.
	'A' Group	67–137	Crankcase breather outer seal ($\frac{3}{32}''$)	As reqd.
83	'A' Group	24–7000	Camshaft pinion nut	1
84	'A' Group	67–685	Camshaft pinion nut lock washer	1
85	'A' Group	67–337	Camshaft driving pinion complete	1
86	A7, A10, Plunger and Swinging Arm.	67–1882	Auto advance unit with gear	1
87		67–686	Camshaft bush (gear side)	2
88	'A' Group	35–1896	Camshaft pinion key	1
89	A7, A10, Plunger frame and Swinging Arm.	67–334	Camshaft	1
	Star Twin and Shooting Star	67–356	Camshaft	1
90	'A' Group	67–686	Camshaft bush (drive side)	1
91	'A' Group	67–686	Idler pinion bush	1
92	'A' Group	67–707	Idler pinion spindle	1
93	'A' Group	27–1386	Idler pinion key	1
94	'A' Group	25–7151	Breather pipe clip bolt nut	1
95	'A' Group	67–923	Breather pipe clip	1
96	'A' Group	67–922	Breather pipe	1
97	'A' Group	1–4606	Breather pipe clip bolt	1
98	'A' Group Plunger	2–49	Crankcase stud nut	13
	'A' Group Swinging Arm	2–49	Crankcase stud nut	9
99	'A' Group Plunger	36–382	Crankcase stud nut washer	13
	'A' Group Swinging Arm	36–382	Crankcase stud nut washer	9
100	'A' Group Plunger	29–4101	Crankcase connecting stud (bottom) (rear)	1
	'A' Group Swinging Arm	29–4101	Crankcase connecting stud (bottom)	2
101	'A' Group Swinging Arm	67–352	Crankcase connecting stud	4
	'A' Group Plunger	67–352	Crankcase connecting stud	2
102	'A' Group Swinging Arm	67–1085	Crankcase with fixed fittings (drive side)	1
103	'A' Group	67–1401	Oil retaining ball grub screw	1
104	'A' Group	67–1400	Oil retaining ball spring	1
105	'A' Group	$\frac{1}{4}''$ diam.	Oil retaining ball	1
106	'A' Group Swinging Arm	67–1087	Crankcase with fixed fittings (gear side)	1
107	'A' Group Plunger	67–340	Scavenge pipe complete	1
108	'A' Group Plunger	67–1281	Scavenge pipe fixing bolt lock washer	1
109	'A' Group Plunger	67–1280	Scavenge pipe fixing bolt	1
110	Star Twin and Shooting Star	24–195	Magneto driving pinion nut	1
111	Star Twin and Shooting Star	2–2903	Magneto driving pinion washer	1
112	Star Twin and Shooting Star	67–540	Magneto driving pinion, assembled	1
113	'A' Group Plunger	67–2071	Cush drive bearing	1
114	'A' Group Plunger	67–2050	Engine sprocket with sleeve and key	1
115	'A' Group Plunger	67–2055	Cush drive sliding sleeve	1
116	'A' Group Plunger	67–2062	Cush drive spring	1
117	'A' Group Plunger	67–2054	Cush drive bearing nut	1
118	'A' Group Plunger	67–1461	Oil pipe union with pipes	1
119	'A' Group Plunger	67–1467	Oil pipe union fixing bolt	1
120	'A' Group Plunger	66–4707	Oil pipe union fixing bolt washer (shakeproof)	1
121	'A' Group Plunger	67–1463	Oil pipe union locating bush	1
122	'A' Group Plunger	67–1466	Oil pipe union joint washer	1
123	'A' Group Plunger	2–923	Primary chain tensioner stud washer	2
124	'A' Group Plunger	67–1264	Primary chain tensioner stud nut	2
125	'A' Group Plunger	65–8038	Primary chain tensioner stud nut locking wire	1
126	'A' Group Plunger	67–1263	Primary chain tensioner spring plate	1
127	'A' Group Plunger	67–1261	Primary chain tensioner	1
128	'A' Group Plunger	67–1262	Primary chain tensioner stud	2
129	'A' Group Plunger	67–1268	Primary chain tensioner adjuster screw	1
130	'A' Group Plunger	67–1266	Primary chain tensioner adjuster nut	1
131	'A' Group Plunger	67–1704	Primary chain cover screw (long)	1
132	'A' Group Plunger	66–3074	Crankcase and primary chain cover dowel	2
133	'A' Group Plunger	67–1706	Primary chain cover screw (medium)	7
134	'A' Group Plunger	67–1244	Crankcase oil flinger rivet	3
135	'A' Group Plunger	67–1243	Crankcase oil seal washer	1
136	'A' Group Plunger	67–1241	Crankcase oil flinger	1
137	'A' Group Plunger	67–1242	Crankcase oil seal	1
138	'A' Group Plunger	67–1703	Primary chain	1
139	'A' Group Plunger	67–1701	Primary chain cover	1
140	'A' Group Plunger	67–1702	Primary chain cover joint washer	1
141	'A' Group Plunger	67–42	Primary chain cover oil filler plug washer (fibre)	1

Plate 2—*continued* ENGINE—'A' GROUP (PLUNGER AND SWINGING ARM FRAMES)

Plate Ref. Number	Model	Part No.	Description	Number per set
142	'A' Group Plunger	65–3364	Primary chain oil filler plug	1
143	'A' Group Plunger	67–1711	Primary chain cover oil level screw	1
144	'A' Group Plunger	67–1709	Primary chain oil level screw washer	1
145	'A' Group Plunger	67–1705	Primary chain cover screw (short)	3
146	'A' Group Plunger	67–453	Crankcase with fixed fittings (drive side)	1
147	'A' Group Plunger	67–352	Crankcase connecting stud (front)	2
148	'A' Group Plunger	67–455	Crankcase with fixed fittings (gear side)	1
149	'A' Group Plunger	21–5104	Crankcase and gearbox stud nut	2
150	'A' Group Plunger	66–4707	Crankcase and grearbox stud nut washer (shakeproof)	4
151	'A' Group Plunger	35–4005	Gearbox fixing stud (crankcase bottom fixing)	2
152	'A' Group Plunger	67–1467	Gearbox fixing bolt (crankcase top fixing)	2
153	'A' Group Plunger	67–1235	Crankcase connecting stud (gearbox housing)	2
154	'A' Group Plunger	67–1710	Primary chain cover and bottom chainguard screw nut	1
155	'A' Group Swinging Arm	67–1134	Cush drive bearing (1955 models)	1
156	'A' Group Swinging Arm	67–1138	Cush drive distance piece (1955 models)	1

Plate 3 GEARBOX—'A' GROUP (PLUNGER FRAME)

Plate Ref. Number	Model	Part No.	Description	Number per set
1	'A' Group	67–3014	Gearbox with fixed fittings	1
2	'A' Group	67–3031	Gearbox inner cover joint washer	1
3	'A' Group	67–3027	Gearbox inspection hole plug	2
4	'A' Group	67–3112	Selector cam plate bearing washer	1
5	'A' Group	67–3137	Selector cam plate bearing	1
6	'A' Group	29–541	Selector cam plate bearing washer	2
7	'A' Group	21–5842	Selector cam plate bearing screw	2
8	'A' Group	67–3266	Clutch cover bolt nut	12
9	'A' Group	29–3319	Clutch cover bolt nut washer	12
10	'A' Group	67–3264	Clutch cover washer	1
11	'A' Group	67–3263	Clutch cover	1
12	'A' Group	67–3249	Clutch spring adjusting nut	6
13	'A' Group	67–3247	Clutch spring	6
14	'A' Group	67–3248	Clutch spring cup	6
15	'A' Group	67–3245	Clutch spring plate	1
16	'A' Group	67–3241	Clutch driven plate	5
17	'A' Group	67–3242	Clutch driving plate	5
18	'A' Group	67–3244	Clutch driving plate insert	120
19	'A' Group	67–3240	Clutch driven plate (rear)	1
20	'A' Group	67–3257	Clutch centre and mainshaft nut	1
21	'A' Group	67–3253	Clutch centre and mainshaft nut washer	1
22	'A' Group	67–3237	Clutch centre complete	1
23	'A' Group	67–3271	Clutch chainwheel complete	1
24	'A' Group	26–650	Clutch chainwheel rollers	18
25	'A' Group	67–3276	Clutch thrust washer (.122″-.126″)	—
		67–3277	Clutch thrust washer (.138″-.140″)	—
		67–3278	Clutch thrust washer (.148″-.150″)	—
26	'A' Group	67–3053	Gearbox sprocket nut	1
27	'A' Group	24–4263	Gearbox sprocket locking washer	1
28	'A' Group	67–3064	Gearbox sprocket (18T) (Standard)	1
	'A' Group	67–3065	Gearbox sprocket (19T)	As reqd.
29	'A' Group	65–3391	Speedometer driven gear bush nut	1
30	'A' Group	65–3392	Speedometer driven gear bush washer	1
31	'A' Group	65–3390	Speedometer driven gear bush	1
32	'A' Group	65–3375	Speedometer driven gear thrust washer	1
33	'A' Group	67–3175	Speedometer driven gear	1
34	'A' Group	65–3377	Speedometer gear bush	1
35	'A' Group	35–702	Clutch push rod lever nut split pin	1
36	'A' Group	15–1485	Clutch push rod lever nut	1
37	'A' Group	2–525	Clutch push rod lever washer	1
38	'A' Group	3–720	Clutch push rod lever adjusting screw nut	1
39	'A' Group	65–3403	Clutch push rod adjustment screw	1

Plate 3 **GEARBOX 'A' GROUP (PLUNGER FRAME)**

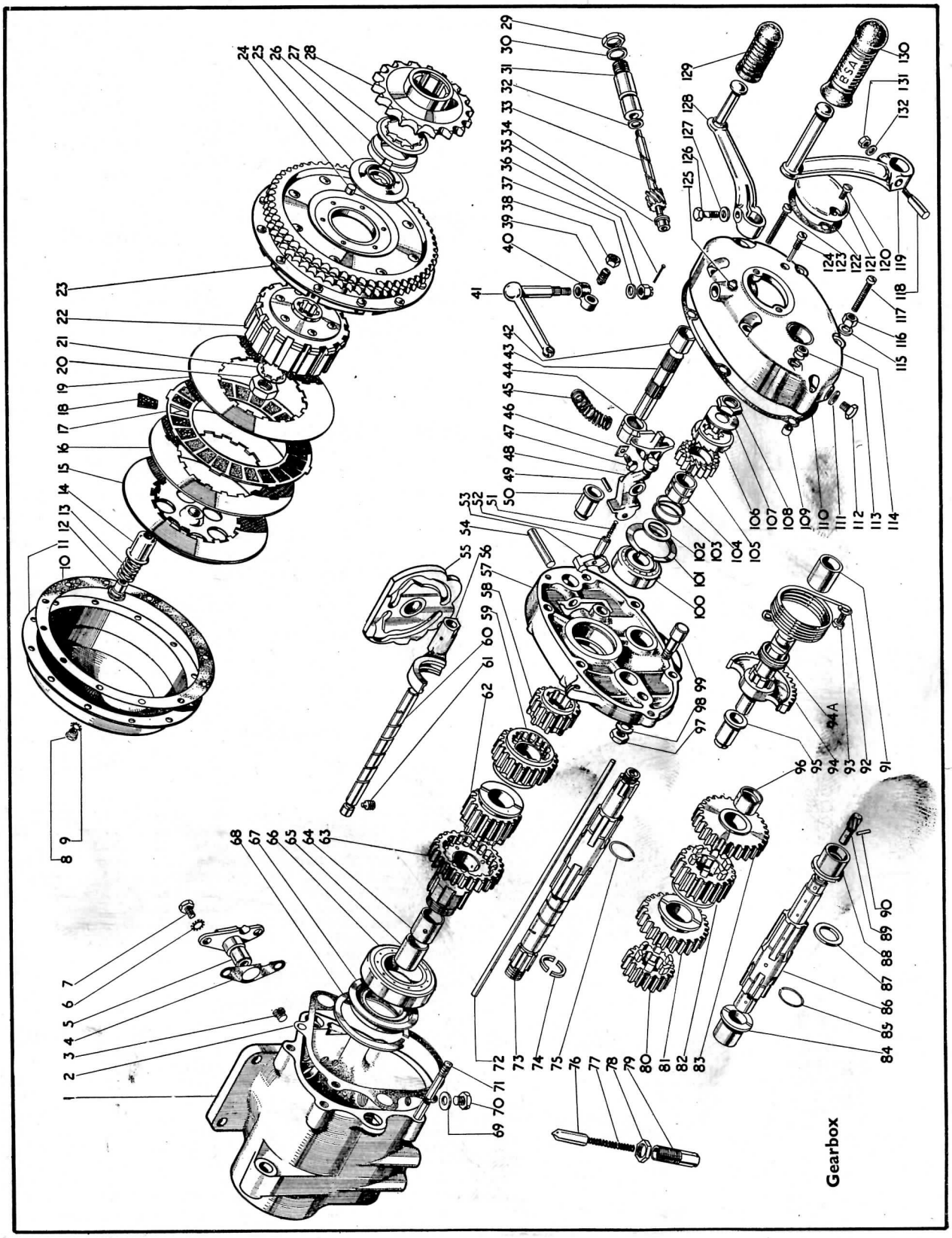

GEARBOX—'A' GROUP (PLUNGER FRAME)

Plate Ref. Number.	Model	Part No.	Description	Number per set
40	'A' Group	65–3360	Clutch push rod lever	1
41	'A' Group	67–3180	Clutch operating lever	1
42	'A' Group	67–3140	Gearchange lever spindle bush	1
43	'A' Group	67–3147	Gear selector lever spindle	1
44	'A' Group	67–3143	Gear selector lever	1
45	'A' Group	67–3146	Selector lever return spring	2
46	'A' Group	67–3145	Selector lever screw lockwasher	1
47	'A' Group	67–3144	Selector lever screw	1
		67–3130	Gearchange selector arm complete	1
48	'A' Group	67–3131	Gearchange selector arm only	1
49	'A' Group	67–3133	Gearchange selector arm claw pivot	1
50	'A' Group	67–3170	Footchange lever spindle bush	1
51	'A' Group	67–3135	Gearchange selector arm plunger spring	1
52	'A' Group	67–3134	Gearchange selector arm plunger	1
53	'A' Group	67–3132	Gearchange selector arm claw	1
54	'A' Group	67–3136	Gearchange selector arm pivot pin	1
55	'A' Group	67–3113	Gear control cam plate	1
56	'A' Group	67–3204	Gear shifter fork	2
57	'A' Group	67–3017	Gearbox inner cover with fixed fittings	1
58	'A' Group	67–3191	Mainshaft gear (16T)	1
59	'A' Group	67–3202	Mainshaft sliding gear (24T)	1
60	'A' Group	67–3116	Gear shifter fork shaft	1
61	'A' Group	67–3117	Gear shifter fork shaft grub screw	1
62	'A' Group	67–3201	Mainshaft sliding gear (20T)	1
	'A' Group	67–3209	Mainshaft sliding gear (18T) (wide ratio)	1
	'A' Group	67–3210	Mainshaft sliding gear (22T) (wide ratio)	1
63	'A' Group	67–3192	Constant mesh gear complete with bushes (26T)	1
	'A' Group	67–3207	Constant mesh gear complete (26T) (wide ratio)	1
64	'A' Group	67–3080	Constant mesh gear bush (drilled)	1
65	'A' Group	67–3073	Constant mesh gear bush (plain)	1
66	'A' Group	24–4065	Constant mesh gear ball bearing	1
67	'A' Group	67–3067	Gearbox sprocket oil seal	1
68	'A' Group	67–3026	Ball bearing spring ring	1
69	'A' Group	2–4553	Gearbox drain plug washer	1
70	'A' Group	28–243	Gearbox drain plug	1
71	'A' Group	67–3023	Gearbox outer cover stud	4
72	'A' Group	67–3183	Clutch push rod	1
73	'A' Group	67–3061	Gearbox mainshaft only	1
	'A' Group	67–3206	Gearbox mainshaft (wide ratio)	1
		67–3190	Gearbox mainshaft complete with gear	1
74	'A' Group	67–3251	Clutch thrust washer abutment ring	1
75	'A' Group	67–3101	Mainshaft gear locating ring (wide ratio)	1
76	'A' Group	67–3199	Gear control cam plate plunger	1
77	'A' Group	67–3121	Gear control cam plate plunger spring	1
78	'A' Group	67–3122	Gear control cam plate plunger housing nut	1
79	'A' Group	67–3120	Gear control cam plate plunger housing	1
80	'A' Group	67–3196	Layshaft gear (17T)	1
81	'A' Group	67–3197	Layshaft sliding gear (23T)	1
82	'A' Group	67–3198	Layshaft sliding gear (19T)	1
	'A' Group	67–3211	Layshaft sliding gear (25T) (wide ratio)	1
	'A' Group	67–3212	Layshaft sliding gear (21T) (wide ratio)	1
83	'A' Group	67–3199	Layshaft gear complete (27T)	1
	'A' Group	67–3097	Layshaft gear complete (29T) (wide ratio)	1
84	'A' Group	65–3337	Layshaft bush	1
85	'A' Group	67–3101	Layshaft gear locating ring	1
86	'A' Group	67–3195	Layshaft only	1
		67–3194	Layshaft complete with gears	1
87	'A' Group	67–3203	Layshaft thrust washer	1
88	'A' Group	67–3099	Layshaft bush	1
89	'A' Group	67–3088	Speedometer driving gear (6T)	1
90	'A' Group	67–3128	Speedometer driving gear peg	1
91	'A' Group	67–3153	Kickstart lever spindle bush	1
92	'A' Group	67–3174	Kickstarter spring	1
93	'A' Group	2–3718	Kickstarter spring screw	1
94	'A' Group	67–3178	Kickstart spindle and quadrant	1
94A	'A' Group	67–3173	Kickstart spindle sleeve	1
95	'A' Group	67–3151	Kickstart spindle bush	1
96	'A' Group	67–3093	Layshaft gear bush	1
97	'A' Group	2–49	Kickstarter quadrant stop nut	1
98	'A' Group	24–8784	Kickstarter quadrant stop washer	1
99	'A' Group	67–3152	Kickstart quadrant stop	1
100	'A' Group	24–4217	Mainshaft bearing	1

Plate 3—*continued* GEARBOX—'A' GROUP (PLUNGER FRAME)

Plate Ref. Number	Model	Part No.	Description	Number per set.
101	'A' Group	67-3028	Mainshaft bearing spring ring	1
102	'A' Group	67-3161	Kickstart ratchet pinion sleeve washer	1
103	'A' Group	67-3162	Kickstart ratchet spring	1
104	'A' Group	67-3169	Kickstart ratchet pinion bush	1
105	'A' Group	67-3168	Kickstart ratchet pinion	1
106	'A' Group	67-3167	Kickstart ratchet	1
107	'A' Group	67-3164	Kickstart ratchet and mainshaft lockwasher	1
108	'A' Group	67-3163	Kickstart ratchet and mainshaft nut	1
109	'A' Group	66-3074	Gearbox cover dowel	1
110	'A' Group	67-3032	Gearbox outer cover joint washer	2
111	'A' Group	2-4553	Oil level plug washer	1
112	'A' Group	28-243	Oil level plug	1
113	'A' Group	27-4401	Kickstarter spring screw locknut	1
114	'A' Group	67-3021	Gearbox outer cover with fixed fittings	1
115	'A' Group	2-923	Gearbox outer cover fixing washer	4
116	'A' Group	67-3034	Gearbox outer cover fixing nut	4
117	'A' Group	67-1705	Gearbox outer cover fixing screw (short)	1
118	'A' Group	2-2579	Kickstarter crank cotter	1
119	'A' Group	65-3381	Kickstarter crank	1
120	'A' Group	24-7178	Gearbox inspection cover screw	2
121	'A' Group	67-3024	Gearbox inspection cover	1
122	'A' Group	67-3033	Gearbox inspection cover joint washer	1
123	'A' Group	67-1706	Gearbox outer cover fixing screw (long)	2
124	'A' Group	67-3176	Speedometer driven gear retaining pin	1
125	'A' Group	28-2080	Gearbox outer cover grease nipple	1
126	'A' Group	65-3361	Selector lever foot operating screw	1
127	'A' Group	2-525	Foot operating lever screw washer	1
128	'A' Group	65-3417	Gear change operating lever	1
129	'A' Group	29-3250	Footchange operating lever rubber	1
130	'A' Group	65-3397	Kickstart crank rubber	1
131	'A' Group	2-2578	Kickstart crank cotter nut	1
132	'A' Group	15-5155	Kickstart crank cotter washer	1

Plate 4 GEARBOX—'A' GROUP (SWINGING ARM FRAME)

Plate Ref. Number.	Model	Part No.	Description	Number per set.
1	'A' Group	67-3026	Ball bearing spring ring	1
2	'A' Group	67-3067	Gearbox sprocket oil seal	1
3	'A' Group	24-4065	Constant mesh gear ball bearing	1
4	'A' Group	67-3073	Constant mesh gear bush	1
5	'A' Group	67-3192	Constant mesh gear complete (26T)	1
6	'A' Group	67-3080	Constant mesh gear bush (drilled)	1
7	'A' Group	67-3201	Mainshaft sliding gear (20T)	1
8	'A' Group	67-3202	Mainshaft sliding gear (24T)	1
9	'A' Group	67-3329	Gearbox mainshaft with gear	1
	'A' Group	67-3330	Gearbox mainshaft only	1
10	'A' Group	2-433	Gearbox mainshaft key	1
11	'A' Group	29-3860	Clutch push rod	1
12	'A' Group	67-3101	Mainshaft gear locating ring	1
13	'A' Group	67-3191	Gearbox mainshaft gear (16T)	1
14	'A' Group	24-4217	Mainshaft bearing	1
15	'A' Group	67-3028	Mainshaft bearing spring ring	1
16	'A' Group	67-3161	Kickstarter ratchet pinion sleeve washer	1
17	'A' Group	67-3169	Kickstarter ratchet pinion bush	1
18	'A' Group	67-3162	Kickstarter ratchet spring	1
19	'A' Group	67-3168	Kickstarter ratchet pinion	1
20	'A' Group	67-3167	Kickstarter ratchet	1
21	'A' Group	67-3164	Kickstarter ratchet and mainshaft lock washer	1
22	'A' Group	67-3163	Kickstarter ratchet and mainshaft nut	1
23	'A' Group	42-3010	Gearchange operating lever	1

Plate 4

GEARBOX 'A' GROUP (SWINGING ARM FRAME)

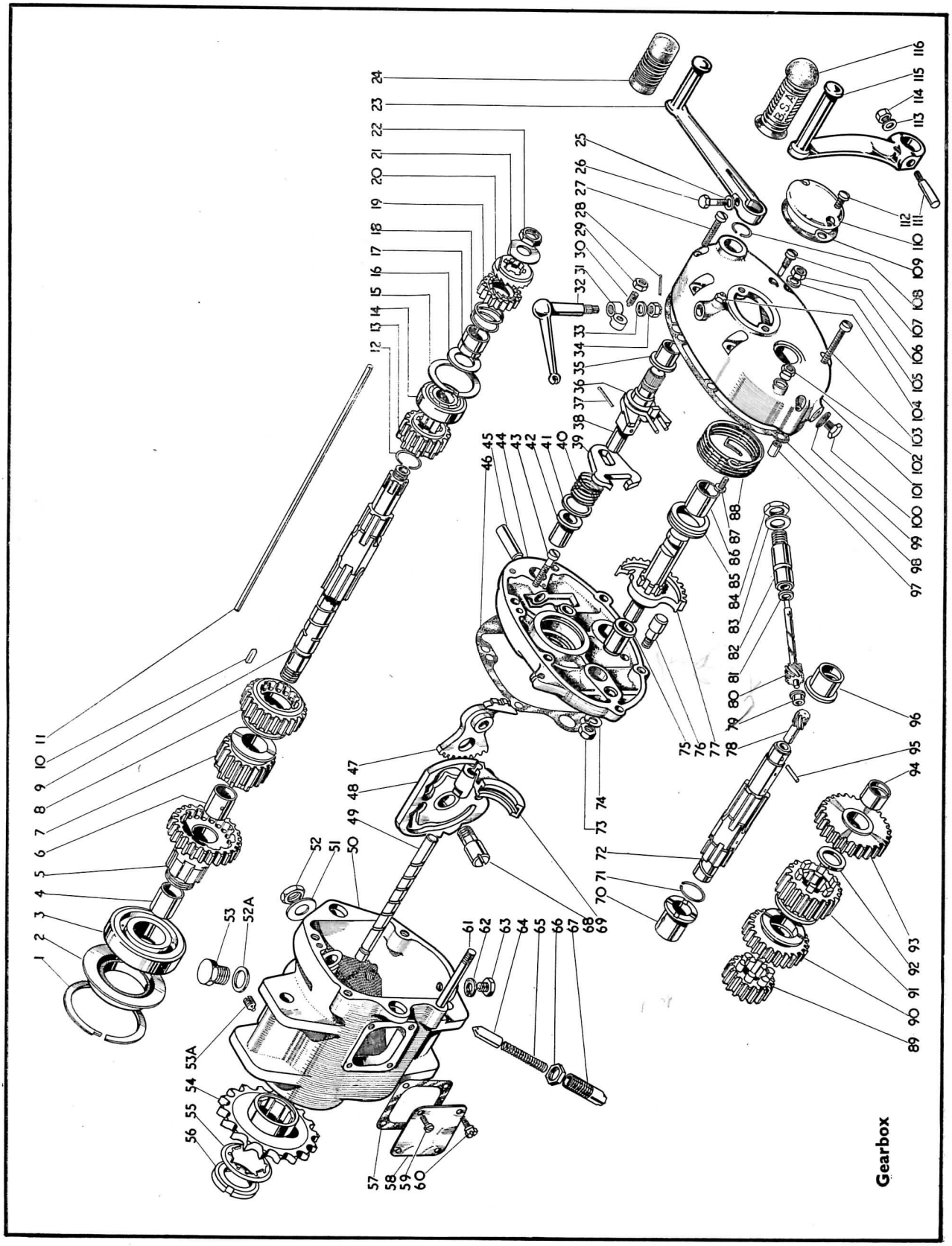

GEARBOX—'A' GROUP (SWINGING ARM FRAME)

Plate Ref. Number	Model	Part No.	Description	Number per set
24	'A' Group	29–3250	Foot operating lever rubber	1
25	'A' Group	2–525	Foot operating lever screw washer	1
26	'A' Group	65–3361	Selector lever foot operating screw	1
27	'A' Group	65–3061	Outer cover fixing screw (long)	2
28	'A' Group	35–702	Clutch push rod lever nut split pin	1
29	'A' Group	3–720	Clutch push rod lever adjusting screw nut	1
30	'A' Group	65–3403	Clutch push rod adjusting screw complete	1
31	'A' Group	65–3360	Clutch push rod lever	1
32	'A' Group	67–3180	Clutch operating lever complete	1
33	'A' Group	2–525	Clutch push rod lever washer	1
34	'A' Group	15–1485	Clutch push rod lever nut	1
35	'A' Group	67–3353	Gearchange lever spindle bush	1
36	'A' Group	67–3340	Footchange stop plate return spring	1
37	'A' Group	35–709	Gear selector plate spring washer split pin	1
38	'A' Group	67–3335	Selector spindle complete	1
39	'A' Group	67–3341	Gear selector plate	1
40	'A' Group	67–3342	Gear selector plate spring	1
41	'A' Group	24–868	Gear selector plate spring washer	1
42	'A' Group	67–3170	Footchange lever spindle bush	1
43	'A' Group	65–2157	Gearbox inner cover retaining screw	1
44	'A' Group	67–3344	Gearbox inner cover complete	1
45	'A' Group	67–3350	Gearchange quadrant pivot pin	1
46	'A' Group	67–3346	Gearbox inner cover joint washer (paper)	1
47	'A' Group	67–3347	Gearchange quadrant complete	1
48	'A' Group	67–3332	Gear control cam plate complete	1
49	'A' Group	67–3116	Gear shifter fork shaft	1
50	'A' Group	42–3006	Gearbox case with fixed fittings	1
51	'A' Group	67–3328	Gear cam plate pivot pin washer	1
52	'A' Group	24–7000	Gear cam plate pivot pin nut	1
53	'A' Group	67–3117	Gear shifter fork grub screw	1
54	'A' Group	67–3065	Gearbox sprocket (19T)	1
55	'A' Group	24–4263	Gearbox sprocket locking washer	1
56	'A' Group	67–3053	Gearbox sprocket nut	1
57	'A' Group	29–3449	Gearbox inspection cover washer	1
58	'A' Group	29–3448	Gearbox inspection cover	1
59	'A' Group	2–498	Gearbox inspection cover screw	1
60	'A' Group	27–4258	Gearbox inspection cover screw	3
61	'A' Group	67–3023	Gearbox outer cover stud	4
62	'A' Group	2–4553	Gearbox drain plug washer (fibre)	1
63	'A' Group	28–243	Gearbox drain plug	1
64	'A' Group	67–3119	Gearbox cam plate plunger	1
65	'A' Group	67–3121	Gear control cam plate plunger spring	1
66	'A' Group	67–3122	Gear control cam plate plunger housing nut	1
67	'A' Group	67–3120	Gear control cam plate plunger housing	1
68	'A' Group	67–3327	Gear cam plate pivot pin	1
69	'A' Group	67–3204	Gear shifter fork	2
70	'A' Group	67–3230	Layshaft bush	1
71	'A' Group	67–3101	Layshaft gear locating ring	1
72	'A' Group	42–3018	Layshaft complete with gear (17T)	1
	'A' Group	42–3019	Layshaft only	1
73	'A' Group	2–49	Kickstarter quadrant stop nut	1
74	'A' Group	24–8784	Kickstarter quadrant stop washer	1
75	'A' Group	67–3151	Kickstarter spindle bush	1
76	'A' Group	67–3152	Kickstarter quadrant stop	1
77	'A' Group	67–3178	Kickstarter crank spindle assembly	1
78	'A' Group	67–3088	Speedometer driving gear (6T)	1
79	'A' Group	65–3377	Speedometer gear bush	1
80	'A' Group	67–3175	Speedometer driven gear (11T)	1
81	'A' Group	65–3375	Speedometer driven gear thrust washer	1
82	'A' Group	65–3390	Speedometer driven gear bush	1
83	'A' Group	65–3392	Speedometer driven gear bush washer (fibre)	1
84	'A' Group	65–3391	Speedometer driven gear bush nut	1
85	'A' Group	67–3173	Kickstarter spindle sleeve	1
86	'A' Group	67–3153	Kickstarter lever spindle bush	1
87	'A' Group	2–3718	Kickstarter spring screw	1
88	'A' Group	67–3174	Kickstarter spring	1
89	'A' Group	42–3020	Layshaft gear (17T)	1
90	'A' Group	42–3023	Layshaft sliding gear (23T)	1
91	'A' Group	67–3198	Layshaft sliding gear (19T)	1
92	'A' Group	67–3203	Layshaft thrust washer	1

Plate 4—*continued*

GEARBOX—'A' GROUP (SWINGING ARM FRAME)

Plate Ref. Number	Model	Part No.	Description	Number per set
93	'A' Group	67–3199	Layshaft gear complete (27T)	1
94	'A' Group	67–3093	Layshaft gear bush	1
95	'A' Group	67–3128	Speedometer gear layshaft peg	1
96	'A' Group	67–3099	Layshaft bush	1
97	'A' Group	66–3074	Dowel	2
98	'A' Group	67–3354	Gearbox outer cover joint washer (paper)	1
99	'A' Group	2–4553	Oil level plug washer (fibre)	1
100	'A' Group	28–243	Oil level plug	1
101	'A' Group	67–3351	Gearbox outer cover complete	1
102	'A' Group	27–4401	Kickstarter spring screw locknut	1
103	'A' Group	67–1705	Outer cover fixing screw (short)	1
104	'A' Group	28–2080	Grease nipple	1
105	'A' Group	2–923	Outer cover fixing nut washer	4
106	'A' Group	67–3034	Outer cover fixing nut	4
107	'A' Group	67–3176	Speedometer driven gear retaining pin	1
108	'A' Group	15–4240	Gearchange operating spindle circlip	1
109	'A' Group	67–3033	Inspection cover joint washer (fibre)	1
110	'A' Group	67–3024	Inspection cover	1
111	'A' Group	2–2579	Kickstarter crank cotter	1
112	'A' Group	24–7178	Inspection cover fixing screw	2
113	'A' Group	15–5155	Kickstarter crank cotter washer (plain)	1
114	'A' Group	2–2578	Kickstarter crank cotter nut	1
115	'A' Group	65–3381	Kickstarter pedal	1
116	'A' Group	65–3397	Kickstarter pedal rubber	1

Plate 5

CLUTCH AND FRONT CHAINCASE—'A' GROUP (SWINGING ARM FRAME)

Plate Ref. Number.	Model	Part No.	Description	Number per set
	'A' Group	42–3052	Clutch complete	1
1	'A' Group	67–1706	Primary chaincase front fixing screw	3
	'A' Group	67–1711	Primary chaincase front fixing oil level and drain screw	2
2	'A' Group	67–1709	Primary chaincase oil level and drain washer (fibre)	2
3	'A' Group	65–3063	Primary chaincase front fixing screw	7
4	'A' Group	2–2395	Clutch spring retaining stud nut	12
5	'A' Group	66–3800	Clutch spring	6
6	'A' Group	66–3781	Clutch spring cup	6
7	'A' Group	42–3056	Clutch actuating cap complete	1
8	'A' Group	65–3858	Clutch plate ferodo inserts	120
9	'A' Group	65–3911	Clutch ballrace inner ring	1
10	'A' Group	65–3910	Clutch ball race ring	2
11	'A' Group	66–3891	Clutch chainwheel ferodo inserts	24
12	'A' Group	24–8930	Primary chain	1
13	'A' Group	65–3873	Clutch sleeve	1
14	'A' Group	65–3833	Clutch sleeve collar	1
15	'A' Group	66–7523	Primary chaincase sliding plate bolt	2
16	'A' Group	2–1462	Primary chaincase sliding plate bolt washer	2
17	'A' Group	2–443	Primary chaincase sliding plate bolt nut	2
18	'A' Group	65–109	Primary chaincase back fixing bolt	1
19	'A' Group	15–7563	Primary chaincase back fixing distance collar	1
20	'A' Group	35–33	Primary chaincase back fixing bolt washer	1
21	'A' Group	2–49	Primary chaincase back fixing bolt nut	1
22	'A' Group	66–3074	Primary chaincase dowel	2
23	'A' Group	42–7503	Primary chaincase (back)	1
24	'A' Group	42–7504	Primary chaincase back washer (felt)	1
25	'A' Group	66–7520	Primary chaincase sliding plate complete	1
26	'A' Group	65–3872	Clutch plate	1

Plate 5 CLUTCH AND FRONT CHAINCASE 'A' GROUP (SWINGING ARM FRAME)

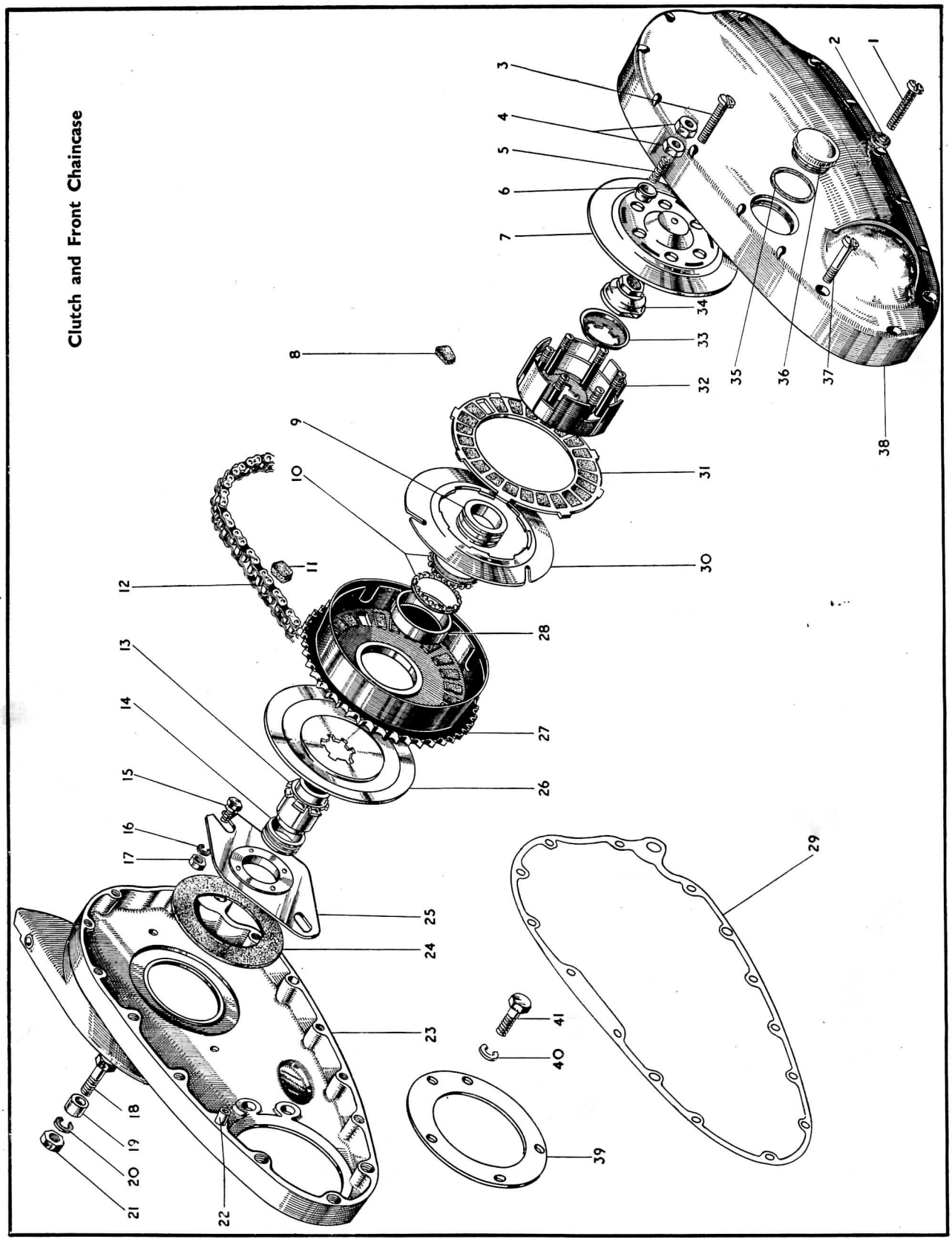

Plate 5—*continued* CLUTCH AND FRONT CHAINCASE—'A' GROUP (SWINGING ARM FRAME)

Plate Ref. Number	Model	Part No.	Description	Number per set
27	'A' Group	42–3054	Clutch chainwheel	1
28	'A' Group	65–3912	Clutch ballrace ring	1
29	'A' Group	42–7507	Primary chaincase joint washer	1
30	'A' Group	65–3824	Clutch driven plate	5
31	'A' Group	65–3857	Clutch driving plate with inserts	5
32	'A' Group	66–3903	Clutch driving plate centre with studs	1
33	'A' Group	65–3822	Mainshaft locking washer nut	1
34	'A' Group	66–3787	Mainshaft nut	1
35	'A' Group	67–42	Primary chaincase inspection cap washer	1
36	'A' Group	65–3364	Primary chaincase inspection cap	1
37	'A' Group	42–7510	Primary chaincase front fixing screw	3
38	'A' Group	42–7506	Primary chaincase (front)	1
39	'A' Group	42–7509	Primary chaincase and crankcase joint washer	1
40	'A' Group	24–8784	Primary chaincase back securing bolt washer (spring)	2
41	'A' Group	67–4028	Primary chaincase back securing bolt	2

Plate 6 FRAME AND FITTINGS 'A' GROUP (PLUNGER FRAME)

Plate Ref. Number	Model	Part No.	Description	Number per set
1	'A' Group	67–4038	Gearbox foot set screw locking wire (4in.)	1
2	'A' Group	67–4028	Gearbox foot set screw	2
3	'A' Group	36–382	Gearbox foot set screw washer (shakeproof)	2
4	'A' Group	67–4848	Central stand pin	2
5	'A' Group	28–2080	Central stand pin grease nipple	2
6	'A' Group	35–698	Central stand split pin	2
7	'A' Group	67–4029	Footrest stud (offside)	1
	'A' Group	67–4041	Footrest stud (nearside)	1
8	'A' Group	67–4851	Footrest bracket	2
9	'A' Group	67–4852	Footrest bracket nut complete (offside)	1
	'A' Group	67–4856	Footrest bracket nut complete (nearside)	1
10	'A' Group	29–7551	Footrest rubber	2
11	'A' Group	2–46	Crankcase and exhaust pipe lug stud nut	2
12	'A' Group	66–4707	Crankcase and exhaust pipe lug stud washer (shakeproof)	2
13	'A' Group	67–1251	Crankcase and exhaust pipe lug stud (solo machines)	1
14	'A' Group	27–6275	Crankcase and exhaust pipe lug stud (when sidecar fitted)	1
15	'A' Group	67–4173	Front engine plate complete (offside)	1
15A	'A' Group	67–354	Front engine support bolt	1
16	'A' Group	24–5160	Engine steady stay bolt nut	1
16A	'A' Group	36–382	Engine steady stay bolt washer (shakeproof)	1
17	'A' Group	2–923	Engine steady stay bolt washer (plain)	1
17A	'A' Group	28–2080	Ball head grease nipple	1
18	'A' Group	67–4056	Frame front complete	1
18A	'A' Group	32–194	Engine steady stay bolt	1
19	'A' Group	67–4036	Engine plate insert complete	1
20	'A' Group	67–4171	Front engine plate complete (nearside)	1
21	'A' Group	66–4708	Front engine support bolt washer (shakeproof)	1
22	'A' Group	2–440	Front engine support bolt nut	1
23	'A' Group	2–46	Saddle front pivot bolt nut	1
24	'A' Group	66–4707	Saddle front pivot bolt washer (shakeproof)	1
25	'A' Group	66–4708	Backstay and seat lug washer (shakeproof)	1
26	'A' Group	28–2080	Saddle pivot grease nipple	1
27	'A' Group	67–4030	Saddle front pivot bolt	1
28	'A' Group	15–7161	Carrier fixing screw	4
29	'A' Group	67–6921	Carrier complete	1
30	'A' Group	2–1462	Carrier fixing screw washer (spring)	4
31	'A' Group	2–2395	Carrier fixing screw nut	4
32	'A' Group	66–4175	Backstay and seat lug stud	1

Plate 6 **FRAME AND FITTINGS 'A' GROUP (PLUNGER FRAME)**

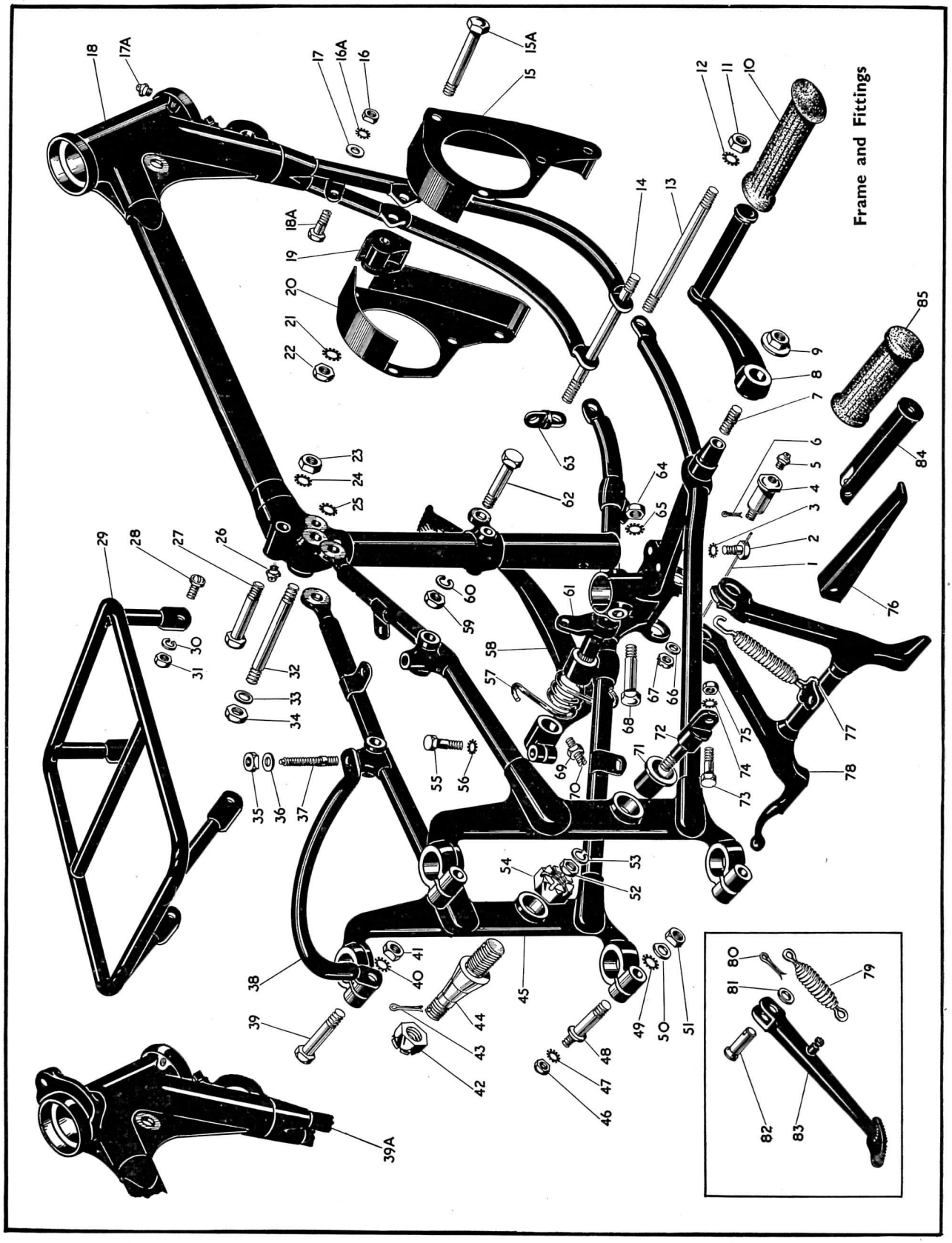

FRAME AND FITTINGS
'A' GROUP (PLUNGER FRAME)

Plate Ref. Number	Model	Part No.	Description	Number per set
33	'A' Group	2–1945	Backstay and seat lug stud washer	2
34	'A' Group	15–541	Backstay and seat lug stud nut	2
35	'A' Group	2–49	Saddle rear fixing stud nut	4
36	'A' Group	2–923	Saddle rear fixing stud washer	4
37	'A' Group	67–4040	Saddle rear fixing stud	2
38	'A' Group	67–4130	Lifting handle	1
39	'A' Group	31–68	Plunger column bolt (top)	2
39A	'A' Group	67–4189	Frame front (1955 models)	1
40	'A' Group	66–4707	Plunger column bolt washer (top) (shakeproof)	2
41	'A' Group	2–46	Plunger column bolt nut (top)	2
42	'A' Group	2–1946	Sidecar chainstay lug stud nut	1
43	'A' Group	35–722	Sidecar chainstay lug stud split pin	2
44	'A' Group	67–4120	Sidecar chainstay lug stud	1
45	'A' Group	67–4094	Chainstay and backstay complete	1
46	'A' Group	2–49	Plunger carrier bottom clip and silencer support bolt nut	2
47	'A' Group	36–382	Plunger carrier bottom clip and silencer support bolt washer (shakeproof)	2
48	'A' Group	67–4128	Plunger carrier bottom clip and silencer support bolt	2
49	'A' Group	66–4707	Plunger carrier bottom clip bolt washer (shakeproof)	2
50	'A' Group	67–4129	Plunger carrier bottom clip and silencer support bolt distance washer	2
51	'A' Group	2–46	Plunger carrier and bottom clip bolt nut	2
52	'A' Group	2–46	Pillion footrest anchor bolt nut	2
53	'A' Group	2–2903	Pillion footrest anchor bolt washer (spring)	2
54	'A' Group	67–4122	Sidecar chainstay lug stud locknut	1
55	'A' Group	15–518	Rear brake pedal pinch bolt	1
56	'A' Group	36–382	Rear brake pedal pinch bolt washer (shakeproof)	1
57	'A' Group	67–7032	Rear brake pedal return spring	1
58	'A' Group	67–7026	Rear brake pedal complete	1
59	'A' Group	2–440	Gearbox top fixing bolt nut	1
60	'A' Group	3–110	Gearbox top fixing bolt washer (spring)	1
61	'A' Group	67–7027	Rear brake pedal operating lever	1
62	'A' Group	67–4027	Gearbox top fixing bolt	1
63	'A' Group	3–1718	Front bottom connecting link (when sidecar fitted)	1
64	'A' Group	2–440	Chainstay bridge clamp bolt nut	1
65	'A' Group	66–4708	Chainstay bridge clamp bolt washer (shakeproof)	1
66	'A' Group	30–733	Central stand pin washer	2
67	'A' Group	21–431	Central stand pin nut	2
68	'A' Group	67–4027	Chainstay bridge clamp bolt	1
69	'A' Group	2–2395	Rear brake pedal adjusting screw nut	1
70	'A' Group	67–7037	Rear brake pedal adjusting screw	1
71	'A' Group	67–4183	Pillion footrest adaptor (solo)	2
	'A' Group	67–4183	Pillion footrest adaptor (sidecar)	1
72	'A' Group	29–7560	Pillion footrest anchor bolt	2
73	'A' Group	29–7564	Pillion footrest swivel bolt	2
74	'A' Group	36–382	Pillion footrest swivel bolt washer (shakeproof)	2
75	'A' Group	24–6040	Pillion footrest swivel bolt nut	2
76	'A' Group	29–7561	Pillion footrest complete	2
77	'A' Group	67–4847	Central stand spring	1
78	'A' Group	67–4816	Central stand complete	1
79	'A' Group	65–4742	Prop stand spring	1
80	'A' Group	35–710	Prop stand split pin	1
81	'A' Group	2–1945	Prop stand pivot pin washer	1
82	'A' Group	67–4907	Prop stand pivot pin	1
83	'A' Group	67–4903	Prop stand leg	1
	'A' Group	67–4902	Prop stand assembly	1
84	'A' Group	29–7581	Pillion footrest (less rubber) (1955 models)	2
85	'A' Group	29–7583	Pillion footrest rubber (1955 models)	2

Plate 7 REAR SUSPENSION—'A' GROUP (PLUNGER FRAME)

Plate Ref. Number	Model	Part No.	Description	Number per set
1	'A' Group	67–4166	Plunger carrier column screw plug	2
2	'A' Group	89–4041	Plunger carrier column assembly	2
3	'A' Group	89–4248	Plunger spring outer shroud	2
4	'A' Group	89–4249	Plunger spring inner shroud	2
5	'A' Group	89–4257	Plunger spring top collar	2
6	'A' Group	67–4132	Plunger spring (top)	2
	'A' Group	89–4247	Plunger spring (top) (sidecar)	2
7	'A' Group	66–4707	Clamp lug bolt washer (shakeproof)	2
8	'A' Group	89–4046	Plunger tube with bushes	2
9	'A' Group	3–1399	Clamp lug bolt	2
10	'A' Group	28–2080	Rear spindle clamp lug grease nipple	2
11	'A' Group	67–4125	Rear spindle clamp lug (nearside)	1
	'A' Group	67–4126	Rear spindle clamp lug (offside)	1
12	'A' Group	89–4240	Rebound spring shroud (outer)	2
13	'A' Group	89–4241	Rebound spring shroud (inner)	2
14	'A' Group	89–4258	Rebound spring bottom collar	2
15	'A' Group	89–4259	Rebound spring (bottom)	2
16	'A' Group	2–46	Clamp lug bolt nut	2
17	'A' Group	15–1312	Rear wheel adjusting screw spring	2
18	'A' Group	66–4603	Rear wheel adjusting screw	2
19	'A' Group	67–4127	Rebound spring top collar	2

Plate 8 FRAME AND FITTINGS 'A' GROUP (SWINGING ARM FRAME)

Plate Ref. Number	Model	Part No.	Description	Number per set
1	'A' Group	65–4182	Rear engine and gearbox plate to frame stud (bottom rear)	1
2	'A' Group	2–522	Rear engine and gearbox plate to frame stud washer (spring) (bottom rear)	2
3	'A' Group	2–46	Rear engine and gearbox plate to frame stud nut (bottom rear)	2
4	'A' Group	2–1945	Gearbox pivot stud washer (plain)	2
5	'A' Group	2–1967	Gearbox pivot stud washer (spring)	2
6	'A' Group	2–1925	Gearbox pivot stud nut	2
7	'A' Group	42–4077	Gearbox pivot stud	1
8	'A' Group	27–5683	Rear engine and gearbox plate stud (bottom front)	1
9	'A' Group	2–522	Rear engine and gearbox plate stud washer (spring) (bottom front)	2
10	'A' Group	2–46	Rear engine and gearbox plate stud nut (bottom front)	2
11	'A' Group	2–522	Rear engine plate and crankcase stud washer (spring) (bottom)	2
12	'A' Group	2–46	Rear engine plate and crankcase stud nut (bottom)	2
13	'A' Group	65–4182	Rear engine plate and crankcase stud (bottom)	1
14	'A' Group	42–4277	Front engine plate (offside)	1
15	'A' Group	42–4283	Front engine plate complete (nearside)	1
16	'A' Group	66–4149	Ball head cup	2
17	'A' Group	42–4211	Frame complete with fixed fittings	1
18	'A' Group	28–2080	Ball head grease nipple	1
19	A7 Shooting Star	67–9126	Air cleaner	1
	A7 Shooting Star	65–9271	Air cleaner (1955 models)	1
20	'A' Group	42–4078	Petrol tank fixing bolt socket	1
21	'A' Group	29–8740	Petrol tank fixing bolt socket tab washer	1
22	'A' Group	66–4707	Saddle front fixing bolt washer (shakeproof)	1
23	'A' Group	2–46	Saddle front fixing bolt nut	1
24	'A' Group	29–3319	Air cleaner fixing screw washer (shakeproof)	2
25	'A' Group	42–4574	Air cleaner fixing screw	2
26	'A' Group	2–1096	Air cleaner fixing screw washer (plain)	2
27	'A' Group	67–4588	Air cleaner rubber connection spring clip	1
28	'A' Group	42–4573	Air cleaner rubber connection	1
	A7, A10 Swinging Arm	42–4585	Air cleaner rubber connection (1955 models)	1
29	'A' Group	27–5690	Front engine plate and frame stud (top)	1
30	'A' Group	2–522	Front engine plate and frame stud washer (spring)	4
31	'A' Group	2–46	Front engine plate and frame stud nut	4
32	'A' Group	67–1292	Front engine plate and crankcase stud nut	1

Plate 7 REAR SUSPENSION 'A' GROUP (PLUNGER FRAME)

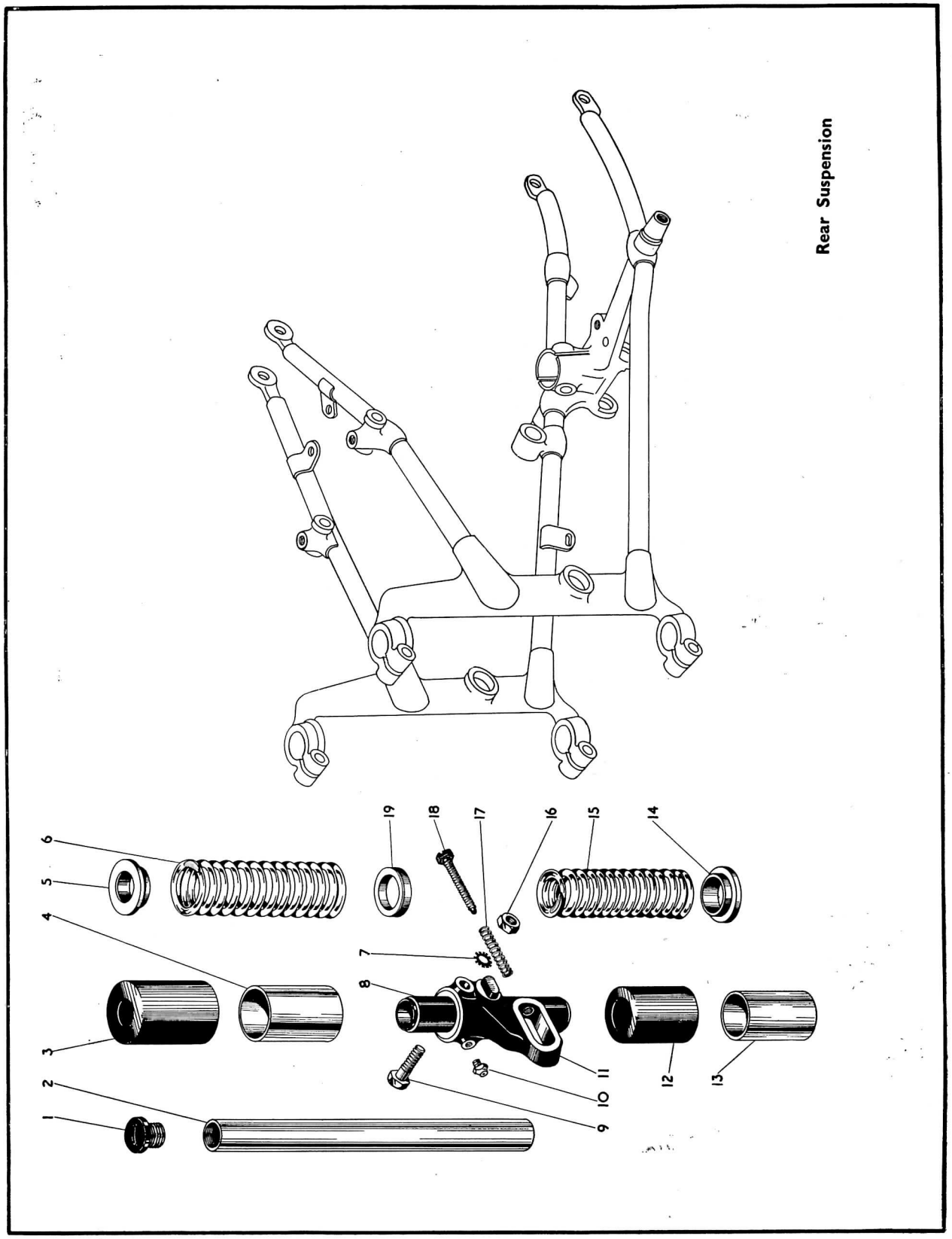

FRAME AND FITTINGS
'A' GROUP (SWINGING ARM FRAME)—*continued*

Plate Ref. Number	Model	Plate No.	Description	Number per set
33	'A' Group	24–8784	Front engine plate and crankcase stud washer (spring)	6
34	'A' Group	67–350	Front engine plate and crankcase stud	3
35	'A' Group	27–6276	Front engine plate, exhaust pipe and horn stud	1
36	'A' Group	42–4278	Rear engine and gearbox plate (top) (offside)	1
	'A' Group	42–4279	Rear engine and gearbox plate (top) (nearside)	1
37	'A' Group	42–4280	Rear engine and gearbox plate (bottom), (offside)	1
	'A' Group	42–4281	Rear engine and gearbox plate (bottom) (nearside)	1
38	'A' Group	66–4163	Rear engine plate and crankcase stud (top)	1
39	'A' Group	42–4071	Front engine plate and frame distance collar	2
40	'A' Group	2–49	Front engine plate and crankcase stud nut	5
41	'A' Group	2–46	Rear engine plate and crankcase stud nut (top)	2
42	'A' Group	2–522	Rear engine plate and crankcase stud washer (spring) (top)	2
43	'A' Group	2–1925	Gearbox locking stud nut	1
44	'A' Group	2–1967	Gearbox locking stud washer (spring)	1
45	'A' Group	42–4076	Gearbox adjusting screw	1
46	'A' Group	2–1616	Gearbox adjusting screw locknut	1
47	'A' Group	15–5664	Gearbox adjusting screw nut	1
48	'A' Group	27–5705	Gearbox adjusting screw stop	1
49	'A' Group	42–4075	Gearbox locking stud washer (serrated)	1
50	'A' Group	42–4074	Gearbox locking stud complete	1
51	'A' Group	42–4132	Rear engine and gearbox plate frame bolt (top)	1
52	'A' Group	2–1462	Gearbox adjusting screw stop washer (spring)	1
53	'A' Group	2–2395	Gearbox adjusting screw stop nut	1
54	'A' Group	2–522	Rear engine and gearbox plate frame bolt washer (spring) (top)	1
54A	'A' Group	2–46	Rear engine and gearbox plate frame bolt nut (top)	1
55	'A' Group	24–6770	Battery base plate bolt	4
56	'A' Group	2–923	Battery base plate bolt washer	2
57	'A' Group	15–6524	Battery base plate bolt nut	2
58	'A' Group	36–382	Battery base plate bolt washer (shakeproof)	4
59	'A' Group	42–4515	Battery base plate	1
60	'A' Group	42–4272	Rear engine plate cover complete	1
61	A7, A10 Swinging Arm	42–4582	Air cleaner complete	1
62	'A' Group	28–2080	Saddle front bolt grease nipple	1
63	'A' Group	67–4030	Saddle front fixing bolt	1
	'A' Group	42–4514	Battery carrier complete	1
64	A7, A10 Swinging Arm	42–4516	Battery strap (side) complete	1
	A7 Shooting Star	42–4503	Battery strap (side)	1
65	'A' Group	42–4502	Battery strap (top)	1
66	'A' Group	24–7343	Batterys strap bolt	2
67	'A' Group	42–9032	Saddle (as required)	1
67A	'A' Group	2–6537	Battery strap bolt washer	2
68	'A' Group	42–4505	Swivel pin (plain hole)	2
69	'A' Group	42–4506	Swivel pin (tapped hole)	2
70	'A' Group	42–4503	Battery strap (side)	1
71	'A' Group	2–49	Saddle rear fixing stud nut	4
72	'A' Group	2–923	Saddle rear fixing stud washer (plain)	4
73	'A' Group	67–4040	Saddle rear fixing stud	2
73A	'A' Group	42–4309	Frame complete with fixed fittings (1955 models)	1
74	'A' Group	29–7561	Pillion footrest complete	2
75	'A' Group	29–7564	Pillion footrest swivel bolt	2
76	'A' Group	29–7560	Pillion footrest anchor bolt	2
77	'A' Group	36–382	Pillion footrest swivel bolt washer (shakeproof)	2
78	'A' Group	24–6040	Pillion footrest swivel bolt nut	2
79	'A' Group	2–522	Pillion footrest anchor bolt washer (spring)	2
80	'A' Group	2–46	Pillion footrest anchor bolt nut	2
	'A' Group	42–4769	Prop stand assembly (fitted after Frame No. CA7-2735)	1
81	'A' Group	67–4907	Prop stand pivot pin	1
82	'A' Group	28–2338	Prop stand lug clip bolt	2
83	'A' Group	42–4772	Prop stand leg complete	1
84	'A' Group	36–382	Prop stand lug clip bolt washer (shakeproof)	2
85	'A' Group	42–4776	Prop stand lug body complete	1
86	'A' Group	2–1945	Prop stand pivot pin washer (plain)	1
87	'A' Group	35–710	Prop stand pivot pin split pin	1
88	'A' Group	65–4742	Prop stand spring	1
89	'A' Group	29–7581	Pillion footrest (less rubber) (1955 models)	2
90	'A' Group	29–7583	Pillion footrest rubber (1955 models)	2

Plate 8 FRAME AND FITTINGS 'A' GROUP (SWINGING ARM FRAME)

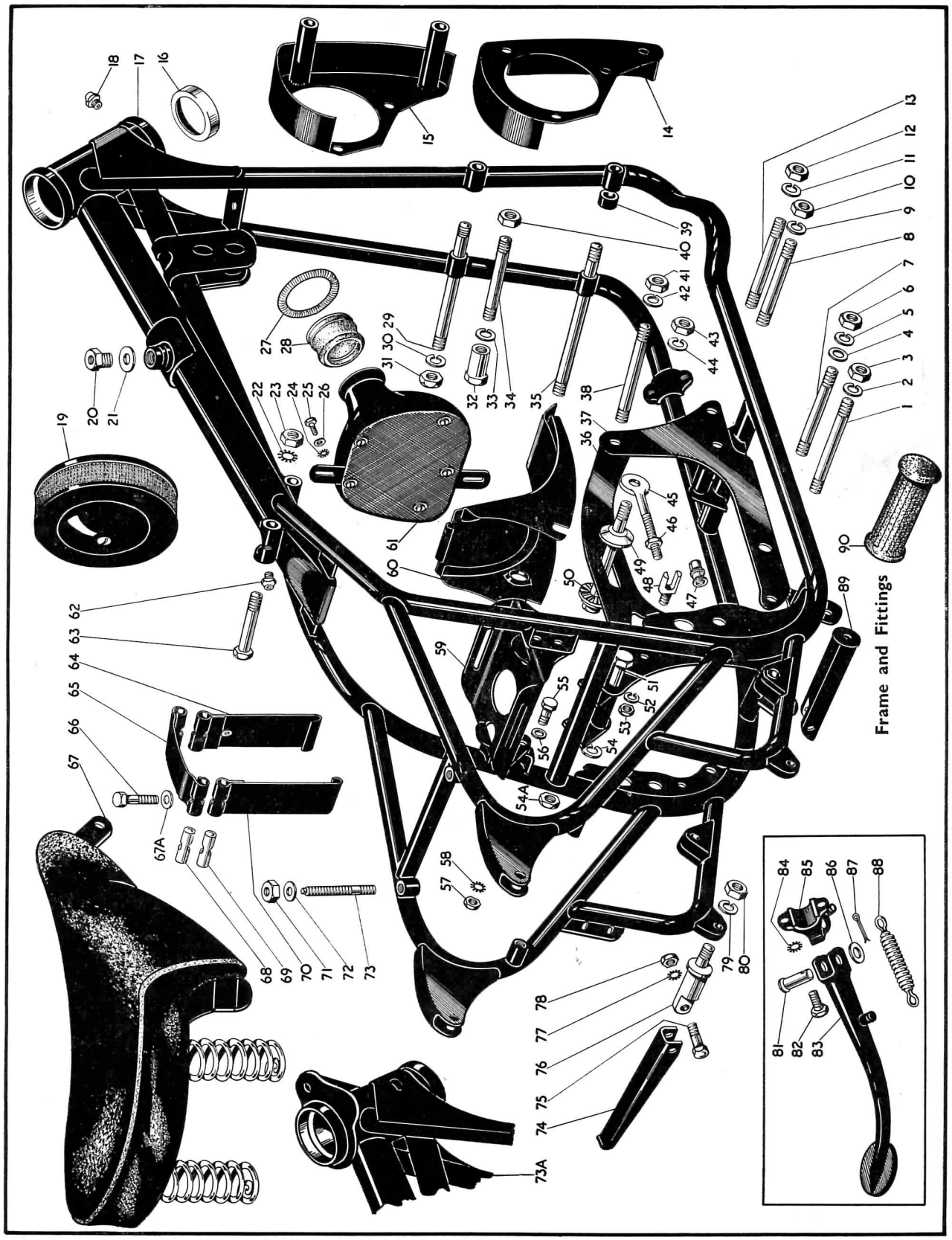

Plate 9

REAR SUSPENSION
'A' GROUP (SWINGING ARM FRAME)

Plate Ref. Number	Model	Part No.	Description	Number per set
1	'A' Group	42–4725	Central stand complete	1
2	'A' Group	28–2080	Central stand grease nipple	1
3	'A' Group	65–4727	Central stand spring	1
4	'A' Group	42–4713	Central stand distance tube	1
5	'A' Group	42–4714	Central stand pivot stud	1
6	'A' Group	2–1945	Central stand pivot stud washer (plain)	1
7	'A' Group	2–1967	Central stand pivot stud washer (spring)	1
8	'A' Group	24–5860	Central stand pivot stud nut	2
9	'A' Group	42–4806	Footrest distance tube complete (offside)	1
10	'A' Group	42–4804	Footrest bracket (offside)	1
11	'A' Group	42–4808	Footrest stud complete	1
12	'A' Group	29–7551	Footrest rubber	2
13	'A' Group	42–4116	Swinging arm fork spindle locknut	1
14	'A' Group	42–4117	Swinging arm fork spindle washer	1
15	'A' Group	1–1796	Rear mudguard bracket and damper top fixing bolt nut	2
16	'A' Group	2–522	Rear mudguard bracket and damper top fixing bolt washer (spring)	2
17	'A' Group	42–6763	Rear mudguard bracket and damper spacing collar	2
18	'A' Group	2–1733	Rear mudguard bracket and damper top fixing bolt washer (plain)	2
19	'A' Group	65–4185	Rear mudguard bracket and damper top fixing bolt	2
20	'A' Group	42–4294	Rear suspension damper spring	2
	'A' Group	42–4299	Rear suspension damper spring (110 lbs. rate) (1955 models)	2
	'A' Group	42–4302	Rear suspension damper spring (130 lbs. rate) (1955 models)	2
21	'A' Group	42–4289	Rear suspension split ring retainer (retaining outer shroud) (2 halves)	2
22	'A' Group	42–4291	Rear suspension outer shroud	2
23	'A' Group	66–2010	Swinging arm fork spindle securing bolt	1
24	'A' Group	36–382	Swinging arm fork spindle securing bolt washer (shakeproof)	1
25	'A' Group	42–4286	Rear suspension damper complete	2
	'A' Group	42–4297	Rear suspension damper complete (110 lbs. rate) (1955 models)	2
	'A' Group	42–4300	Rear suspension damper complete (130 lbs. rate) (1955 models)	2
26	'A' Group	42–4112	Swinging arm fork spindle complete	1
27	'A' Group	42–4115	Swinging arm housing 'silent bloc'	2
28	'A' Group	42–4292	Rear suspension inner shroud	2
29	'A' Group	3–1399	Rear suspension damper bottom fixing bolt	2
30	'A' Group	2–1733	Rear suspension damper bottom fixing bolt washer (plain)	2
31	'A' Group	42–4155	Rear suspension mounting bush (rubber)	4
32	'A' Group	42–4102	Swinging arm complete	1
33	'A' Group	67–4129	Rear suspension damper bottom fixing bolt washer	2
34	'A' Group	66–4707	Rear suspension damper bottom fixing bolt washer (shakeproof)	2
35	'A' Group	2–46	Rear suspension damper bottom fixing bolt nut	2
36	'A' Group	24–563	Rear wheel adjusting screw locknut	2
37	'A' Group	42–6040	Rear wheel adjusting screw	2
38	'A' Group	15–5753	Footrest stud securing nut	1
39	'A' Group	65–695	Footrest stud washer	1
40	'A' Group	24–5914	Footrest stud washer	2
41	'A' Group	42–4805	Footrest bracket (nearside)	1
42	'A' Group	65–4811	Footrest distance tube complete (nearside)	1

Plate 9 **REAR SUSPENSION 'A' GROUP (SWINGING ARM FRAME)**

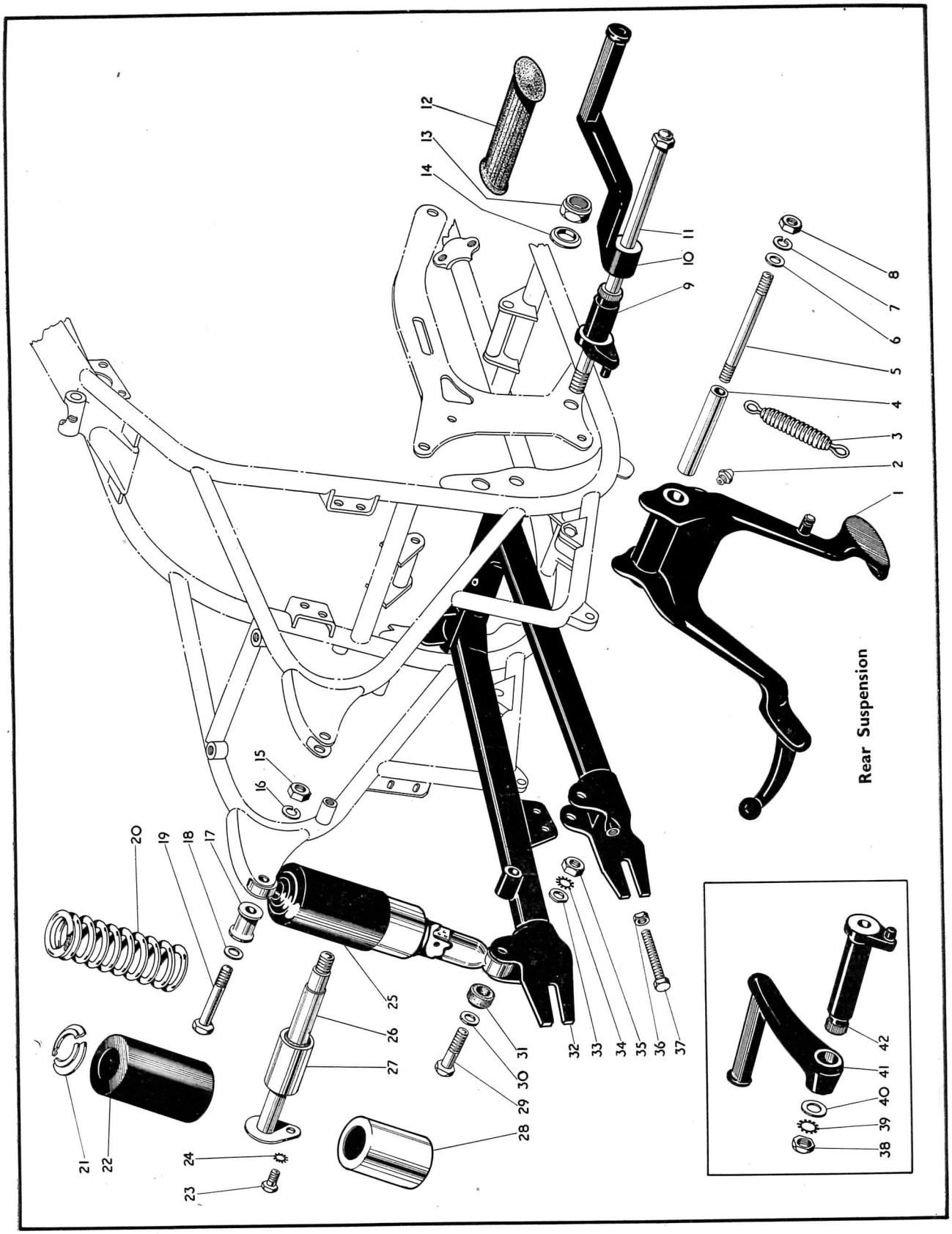

Plate 10

FRONT FORKS AND FITTINGS
'A' GROUP (PLUNGER AND SWINGING ARM FRAMES)

Plate Ref. Number	Model	Part No.	Description	Number per set
	'A' Group Plunger Frame	67–5077	Front forks assembled complete	1
	'A' Group Swinging Arm	42–5005	Front forks assembled complete	1
	'A' Group Plunger	67–5103	Front forks assembled complete (1955 models)	1
	'A' Group Swinging Arm	42–5033	Front forks assembled complete (1955 models)	1
1	'A' Group	67–5087	Headlamp cowl rubber extrusion	1
2	'A' Group	67–5080	Headlamp cowl fixing support washer	2
3	'A' Group	67–5088	Speedometer mounting rubber	1
4	'A' Group	67–5084	Headlamp cowl	1
5	'A' Group Plunger	65–5430	Front fork top yoke	1
	'A' Group Swinging Arm	42–5010	Front fork top yoke	1
6	'A' Group	65–5331	Front fork tube nut	2
7	'A' Group	65–5332	Front fork tube nut washer	2
8	A10 Plunger	66–5097	Front fork top yoke clip bolt nut	1
	A7 and Star Twin Plunger	29–5315	Front fork top yoke clip bolt nut	1
	'A' Group Swinging Arm			
9	'A' Group	67–5024	Steering stem adjusting sleeve cap	1
10	'A' Group	67–5023	Steering stem adjusting sleeve	1
11	'A' Group	65–5334	Handlebar and yoke clip bolt	4
12	'A' Group	15–5155	Handlebar and yoke clip bolt washer	4
13	'A' Group	65–5333	Handlebar clip	2
14	'A' Group	27–5135	Front fork top yoke clip bolt	1
15	'A' Group	66–5204	Steering head dust cap	1
16	'A' Group	65–5126	Steering head ballrace cone (top)	1
17	'A' Group	¼″ diam.	Steering head balls	40
18	'A' Group	65–5127	Steering head ballrace cone (bottom)	1
19	'A' Group Plunger	66–5089	Front fork bottom yoke	1
	A7, A10 Swinging Arm	42–5012	Front fork bottom yoke	1
	A7 Shooting Star	42–5015	Front fork bottom yoke	1
20	'A' Group	67–5021	Steering damper adjuster rod	1
21	'A' Group	24–6035	Steering damper knob washer (spring)	1
22	'A' Group	65–5380	Steering damper friction washer	1
23	'A' Group Swinging Arm	42–5014	Steering damper anchor plate	1
24	'A' Group	25–5247	Steering damper star washer	1
25	'A' Group	65–5328	Steering damper centre	1
26	'A' Group Swinging Arm	28–2338	Steering damper anchor plate bolt	1
27	'A' Group	2–923	Steering damper anchor plate bolt washer (plain)	1
28	'A' Group	36–382	Steering damper anchor plate bolt lockwasher	1
29	'A' Group	2–49	Steering damper anchor plate bolt nut	1
30	A7 Shooting Star	2–220	Steering stop lock bolt	2
31	'A' Group	24–5160	Bottom yoke bolt nut	2
32	'A' Group	36–382	Bottom yoke bolt washer	2
33	'A' Group	65–5435	Bottom yoke bolt	2
34	'A' Group	89–5061	Front fork shaft	2
35	'A' Group	29–5338	Front fork shaft plug washer	2
36	'A' Group	29–5283	Front fork shaft plug	2
37	'A' Group	67–5009	Front fork outer sleeve	2
38	'A' Group Plunger	89–5036	Front fork spring (solo)	2
	'A' Group Swinging Arm	65–5390	Front fork spring (solo)	2
	'A' Group	65–5391	Front fork spring (sidecar)	2
39	'A' Group	65–5424	Front fork top bearing	2
40	'A' Group	29–5310	Front fork oil seal holder complete	2
41	'A' Group	29–5313	Front fork oil seal	2
42	'A' Group	29–5320	Front fork top bearing circlip	2
43	'A' Group	29–5347	Front fork bottom bearing	2
44	'A' Group Plunger	67–5050	Front fork sliding tube complete (O/S)	1
	'A' Group Swinging Arm	65–5420	Front fork sliding tube complete (O/S)	1
45	'A' Group	65–5295	Fork end bolt (N/S)	1
46	'A' Group	2–2903	Fork end bolt washer (spring)	1
47	'A' Group	67–5057	Fork sliding tube complete (N/S)	1
48	'A' Group	2–292	Fork end drain plug washer (fibre)	1
49	'A' Group	2–1309	Fork end drain plug	1
50	A7 Shooting Star	2–2395	Steering lock stop bolt nut	2
51	'A' Group Plunger	65–5327	Steering damper anchor plate stud	1
52	'A' Group Plunger	27–5152	Steering damper anchor plate	1
53	'A' Group Plunger	25–5241	Steering damper bottom plate	1
54	'A' Group	65–5449	Fork top yoke plug (rubber) (1955 models) (not adopted)	1
55	'A' Group Plunger	65–5448	Front fork top yoke (1955 models)	1
	'A' Group Swinging Arm	42–5035	Front fork top yoke (1955 models)	1

Plate 10

FRONT FORK AND FITTINGS
'A' GROUP (PLUNGER AND SWINGING ARM FRAMES)

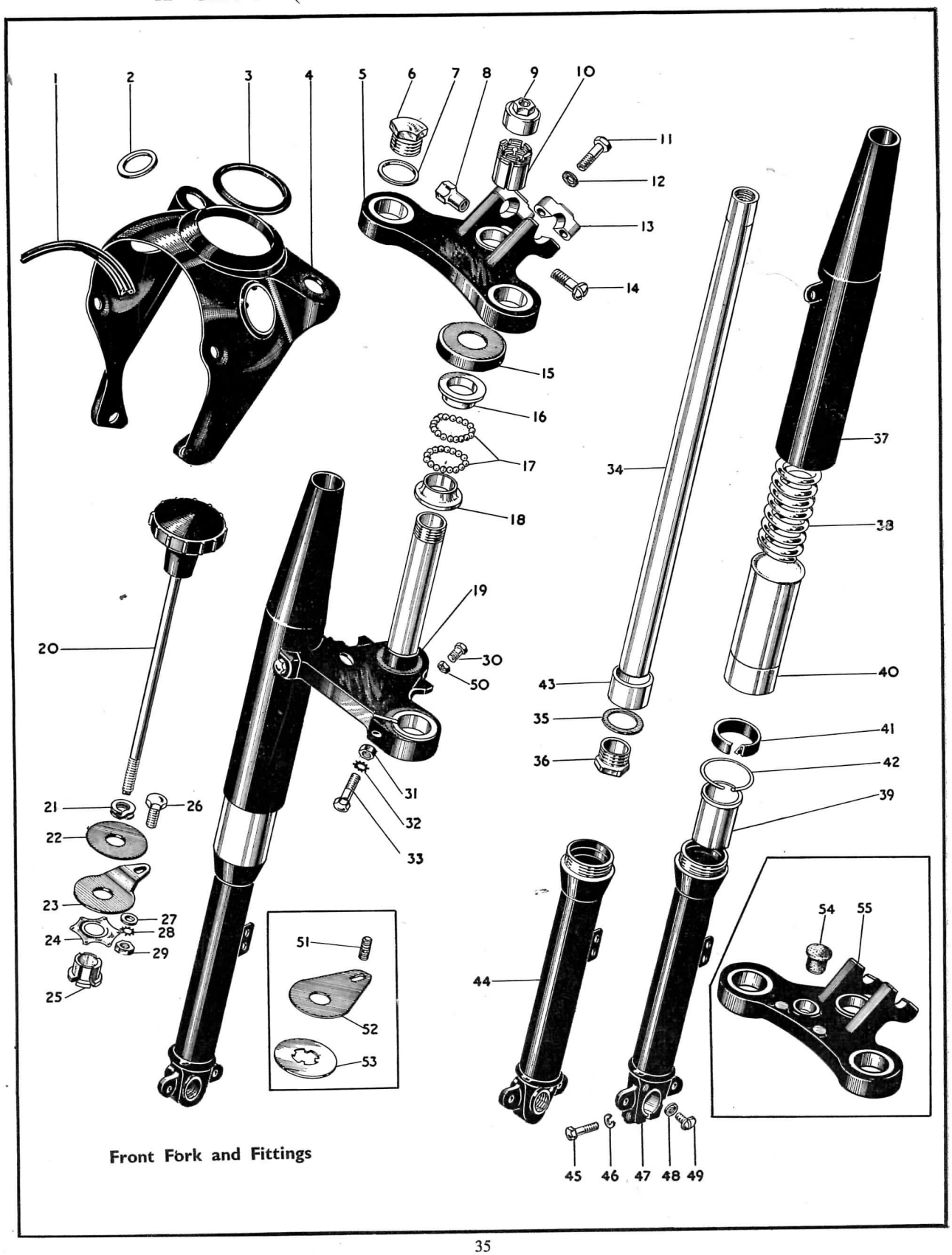

Front Fork and Fittings

Plate 11

FRONT HUB AND WHEEL FITTINGS
'A' GROUP (PLUNGER FRAME)

Plate Ref. Number	Model	Part No.	Description	Number per set
	'A' Group	67–5542	Front wheel complete (less brake and tyre)	1
1	'A' Group	65–5883	Front hub ball journal	1
2	'A' Group	67–5565	Front hub spindle sleeve	1
3	'A' Group	67–5547	Front hub complete with spindle and bearings	1
4	'A' Group	67–5545	Front wheel spoke (long)	20
5	'A' Group	27–6810	Front wheel spoke nipple	40
6	'A' Group	65–5883	Front hub ball journal	1
7	'A' Group	67–5563	Hub bearing oil retaining washer (nearside)	1
8	'A' Group	67–5561	Hub bearing locking ring (nearside)	1
9	'A' Group	67–5566	Front hub spindle	1
10	'A' Group	35–701	Hub bearing locking ring retaining pin	1
11	'A' Group	15–5290	Front hub grease nipple	1
12	'A' Group	67–5544	Front wheel spoke (short)	20
13	'A' Group	35–701	Hub bearing locking ring retaining pin	1
14	'A' Group	67–5562	Hub bearing locking ring (offside)	1
15	'A' Group	67–5575	Brake shoe lining rivet	14
16	'A' Group	67–5576	Front brake fulcrum and adjusting pin	1
17	'A' Group	67–5571	Front brake shoe lining	2
18	'A' Group	67–5555	Front brake cover plate with fixed fittings	1
19	'A' Group	2–49	Front brake anchor strap bolt nut	2
20	'A' Group	36–382	Front brake anchor strap bolt washer (shakeproof)	2
21	'A' Group	67–5578	Front brake anchor strap	1
22	'A' Group	32–194	Front brake anchor strap bolt	2
23	'A' Group	15–716	Front brake cover plate and anchor strap washer	1
24	'A' Group	15–541	Front brake cover plate and anchor strap nut	1
25	'A' Group	2–2527	Front brake fulcrum and adjusting pin nut	1
26	'A' Group	35–37	Front brake fulcrum and adjusting pin washer (shakeproof)	1
27	'A' Group	25–6014	Front brake fulcrum and adjusting pin washer (plain)	1
28	'A' Group	2–440	Front brake shoe cam nut	1
29	'A' Group	66–4708	Front brake shoe cam washer (shakeproof)	1
30	'A' Group	65–5907	Front brake operating lever	1
30A	'A' Group	15–431	Front brake shoe cam washer (plain)	1
31	'A' Group	28–2080	Front brake fulcrum pin grease nipple	1
32	'A' Group	67–5572	Front brake shoe cam	1
33	'A' Group	65–5904	Front brake shoe spring	2
34	'A' Group	67–5558	Front brake shoe complete	2
35	'A' Group	67–5564	Hub bearing oil retaining washer (offside)	1
36	'A' Group	67–5543	Front wheel rim	1

Plate 12

REAR HUB AND WHEEL FITTINGS
'A' GROUP (PLUNGER FRAME)

Plate Ref. Number	Model	Part No.	Description	Number per set
	A7	67–6012/41	Rear wheel complete (less brake and tyre)	1
	A10	67–6012/43	Rear wheel complete (less brake and tyre)	1
	A7 Star Twin	67–6012/42	Rear wheel complete (less brake and tyre)	1
1	'A' Group	2–440	Rear brake operating lever nut	1
2	'A' Group	66–4708	Rear brake operating lever washer	1
3	'A' Group	15–431	Rear brake operating lever washer (plain)	1
4	'A' Group	67–6053	Rear brake operating lever	1
5	'A' Group	67–6081	Brake lever steady strap	1
6	'A' Group	65–5674	Cam bearing oil hole clip	1
7	'A' Group	67–6180	Rear brake cover plate	1
8	'A' Group	65–5905	Rear brake cam	1
9	'A' Group	65–5901	Rear brake shoe complete	2
10	'A' Group	35–6436	Shoe lining rivet	14
11	'A' Group	65–5903	Brake shoe lining	2
12	'A' Group	67–6078	Hub collar (L/H)	1

FRONT AND REAR HUB AND WHEEL FITTINGS
'A' GROUP (PLUNGER FRAME)

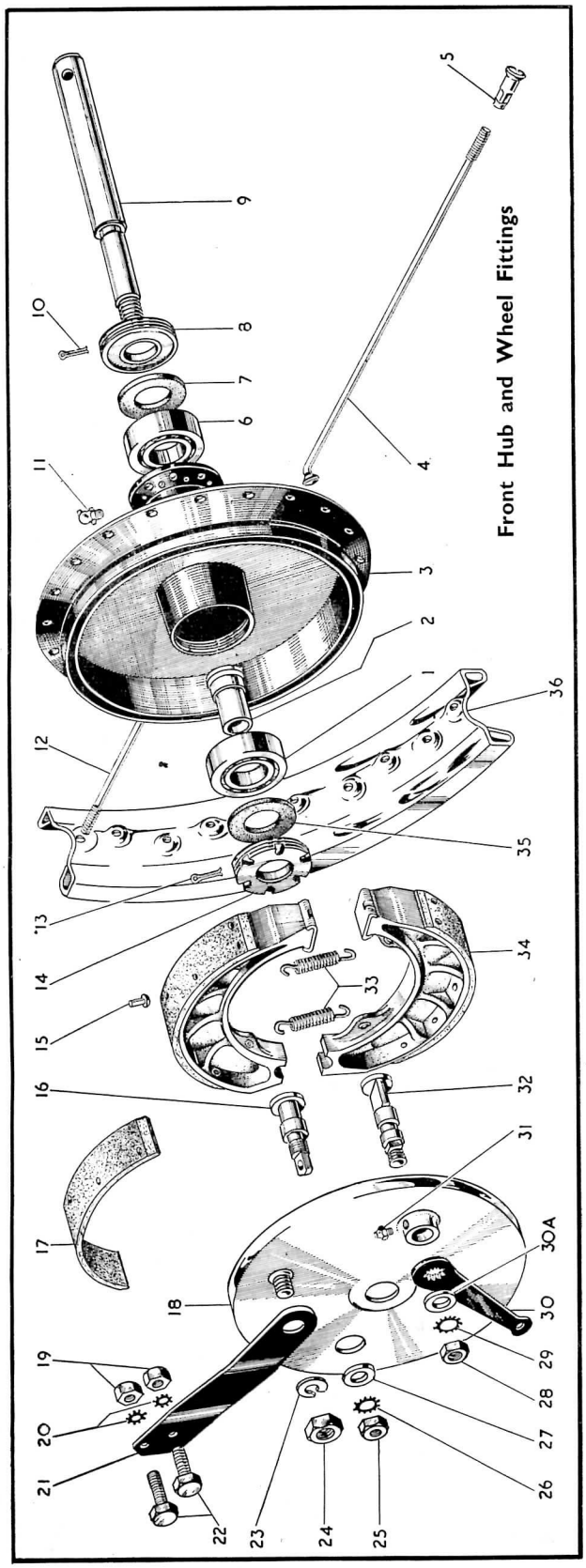

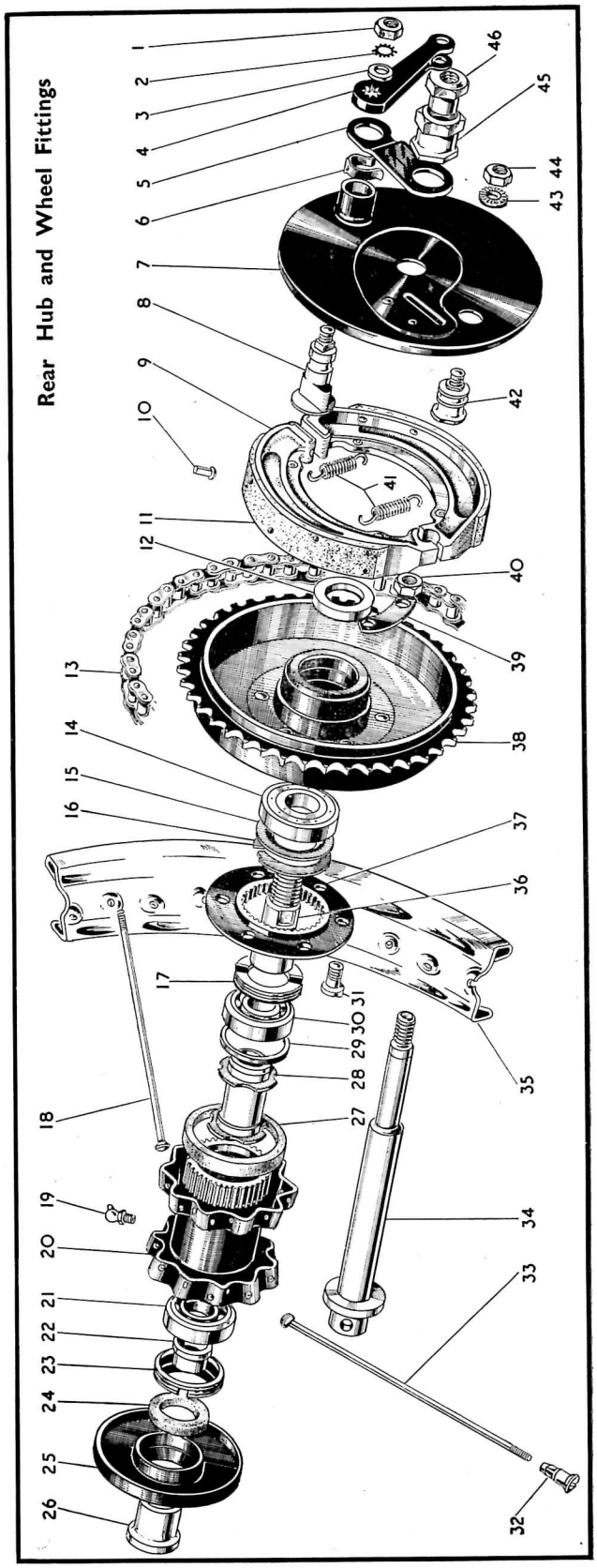

Wheel and Hub Fittings
Mudguards Oil Tank Tools etc.
Dual Seat Petrol Tank Handlebar etc.
Mudguards Petrol Tank and Brake Rod
Mudguard Oil tank Chainguard
Handlebar Petrol Tank Toolbox, etc.
Legshields
Bumper Bars
Bumper Bars Carrier Handrail
Electrical Equipment
Sidecar Chassis
Numeric Index

Plate 12—*continued*

REAR HUB AND WHEEL FITTINGS
'A' GROUP (PLUNGER FRAME)

Plate Ref. Number	Model	Part No.	Description	Number per set
13	'A' Group	67–9045	Rear driving chain (sidecar)	1
	A7 and Star Twin	67–9041	Rear driving chain (solo)	1
	A10	67–9046	Rear driving chain (solo)	1
14	'A' Group	89–3022	Brake drum and chainwheel bearing	1
15	'A' Group	67–6072	Ball bearing shim	1
16	'A' Group	67–6067	Ball bearing retaining ring	1
17	'A' Group	67–6076	Bearing locking ring	1
18	'A' Group	67–6017	Wheel spooke (N/S)	20
19	'A' Group	15–5290	Hub grease nipple	1
20	'A' Group	67–6126	Hub shell complete with bearing	1
21	'A' Group	65–5883	Rear hub ball bearing	1
22	'A' Group	67–6077	Hub collar (R/H)	1
23	'A' Group	67–6076	Bearing locking ring	1
24	'A' Group	67–6075	Rear hub washer (felt)	1
25	'A' Group	67–6128	Rear hub shell cover	1
26	'A' Group	67–6066	Rear hub distance piece (R/H)	1
27	'A' Group	67–6051	Rear hub shell washer (rubber)	1
28	'A' Group	67–6061	Bearing distance tube and retainers	1
29	'A' Group	65–5884	Hub bearing thrust washer	1
30	'A' Group	65–5883	Rear hub ball bearing	1
31	'A' Group	67–6038	Brake drum securing bolt	6
32	'A' Group	27–6813	Rear wheel spoke nipple	40
33	'A' Group	67–6016	Wheel spoke (O/S)	20
34	'A' Group	67–6164	Rear hub spindle	1
35	A7	67–6005/41	Rear wheel rim	1
	A10	67–6005/43	Rear wheel rim	1
	A7 and Star Twin	67–6005/42	Rear wheel rim	1
36	'A' Group	67–6060	Rear hub bearing sleeve	1
37	'A' Group	67–6101	Driving flange	1
38	Star Twin	67–6154	Brake drum and chainwheel (solo)	1
	'A' Group	67–6124	Brake drum and chainwheel (sidecar)	1
	A7	67–6123	Brake drum and chainwheel (solo)	1
	A10	67–6150	Brake drum and chainwheel (solo)	1
39	'A' Group	67–6039	Brake drum securing bolt lock strip	3
40	'A' Group	3–720	Brake drum securing bolt nut	6
41	'A' Group	65–5904	Rear brake spring	2
42	'A' Group	65–5899	Rear brake fulcrum pin	1
43	'A' Group	24–8045	Rear brake fulcrum washer (serrated)	1
44	'A' Group	24–5860	Rear brake fulcrum pin nut	1
45	'A' Group	67–6074	Rear hub bearing sleeve nut	1
46	'A' Group	67–6073	Rear hub spindle nut	1

Plate 13

FRONT HUB AND WHEEL FITTINGS
'A' GROUP (SWINGING ARM FRAME)

Plate Ref. Number	Model	Part No.	Description	Number per set
	'A' Group	67–5542	Front wheel complete (less brake and tyre)	1
1	'A' Group	67–5544	Front wheel spoke (short)	20
2	'A' Group	27–6810	Front wheel spoke nipple	40
3	'A' Group	67–5566	Front hub spindle	1
4	'A' Group	67–5561	Front hub bearing locking ring (nearside)	1
5	'A' Group	35–701	Front hub bearing locking ring retaining pin	1
6	'A' Group	67–5563	Front hub bearing oil retaining washer (nearside)	1
7	'A' Group	65–5883	Front hub ball journal	1
8	'A' Group	15–5290	Front hub grease nipple	1
9	'A' Group	67–5547	Front hub shell complete (with spindle, sleeve and bearings) (less brake)	1
10	'A' Group	67–5543	Front wheel rim	1
11	'A' Group	67–5545	Front wheel spoke (long)	20
12	'A' Group	67–5565	Front hub spindle sleeve	1

Plate 13

FRONT HUB AND WHEEL FITTINGS
'A' GROUP (SWINGING ARM FRAME)

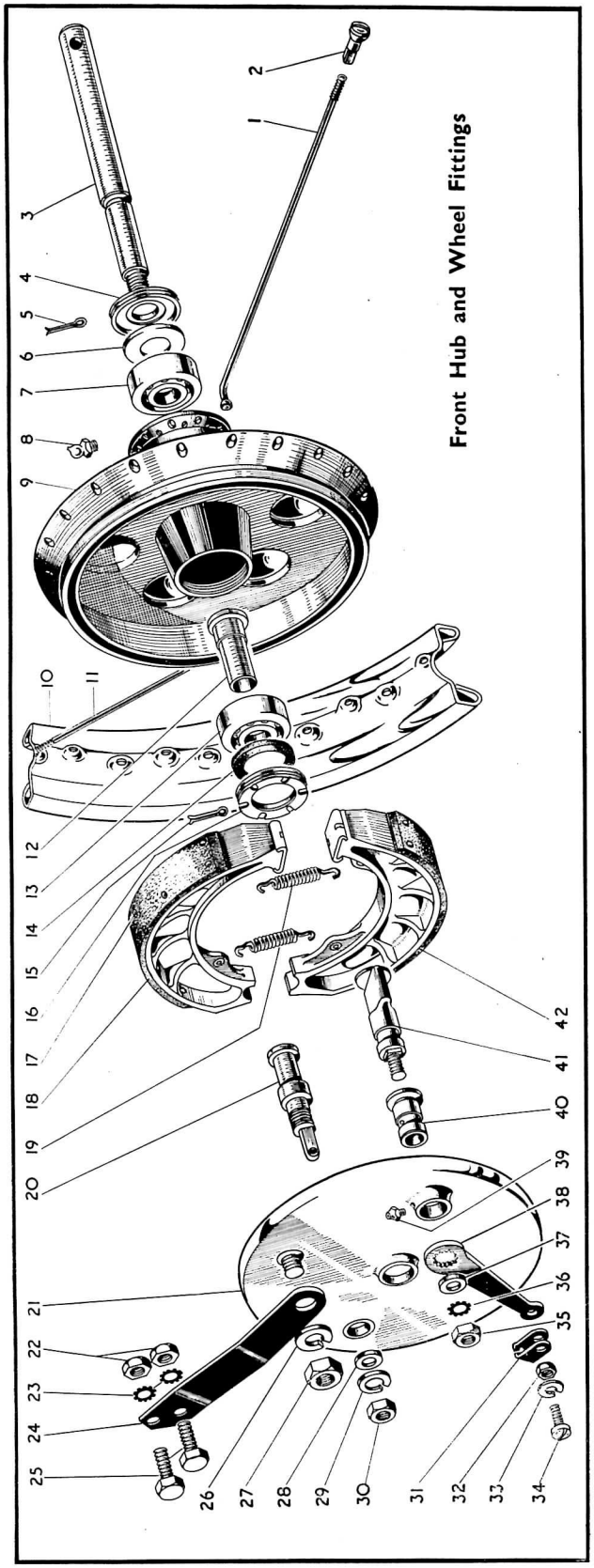

WHEN ORDERING WHEELS, HUBS OR WHEEL RIMS — PLEASE STATE FINISH REQUIRED BY ADDING THE APPROPRIATE SUFFIX NUMBER TO PART NUMBER

Example:

FRONT WHEEL COMPLETE. CHROME RIM AND BEIGE HUB—67-8888/043

Plate 13—*continued* FRONT HUB AND WHEEL FITTINGS 'A' GROUP (SWINGING ARM FRAME)

Plate Ref. Number	Model	Part No.	Description	Number per set
13	'A' Group	65–5883	Front hub ball journal	1
14	'A' Group	67–5564	Front hub bearing oil retaining washer (offside)	1
15	'A' Group	35–701	Front hub bearing locking ring retaining pin	1
16	'A' Group	67–5562	Front hub bearing locking ring (offside)	1
17	'A' Group	67–5575	Front brake shoe lining rivet	14
18	'A' Group	67–5571	Front brake shoe lining	2
19	'A' Group	65–5904	Front brake shoe spring	2
20	'A' Group	67–5576	Front brake fulcrum and adjusting pin	1
21	'A' Group	67–5555	Front brake cover plate with fixed fittings	1
22	'A' Group	2–49	Front brake anchor strap nut	2
23	'A' Group	36–382	Front brake anchor strap nut washer	2
24	'A' Group	67–5578	Front brake anchor strap	1
25	'A' Group	32–194	Front brake anchor strap bolt	2
26	'A' Group	15–716	Front brake cover plate and anchor strap washer (spring)	1
27	'A' Group	15–541	Front brake cover plate and anchor strap nut	1
28	'A' Group	25–6014	Front brake fulcrum and adjusting pin washer (plain)	1
29	'A' Group	35–37	Front brake fulcrum and adjusting pin washer (spring)	1
30	'A' Group	2–2527	Front brake fulcrum and adjusting pin nut	1
31	'A' Group	29–5871	Front brake lever toggle	1
32	'A' Group	2–443	Front brake lever toggle nut	1
33	'A' Group	2–1462	Front brake lever toggle washer	1
34	'A' Group	2–510	Front brake lever toggle screw	1
35	'A' Group	2–440	Front brake shoe cam nut	1
36	'A' Group	66–4708	Front brake shoe cam washer (shakeproof)	1
37	'A' Group	15–431	Front brake shoe cam washer (plain)	1
38	'A' Group	65–5907	Front brake operating lever	1
39	'A' Group	28–2080	Front brake fulcrum pin grease nipple	1
40	'A' Group	67–5567	Front brake cam bearing	1
41	'A' Group	67–5572	Front brake shoe cam complete	1
42	'A' Group	67–5558	Front brake shoe with lining	2

Plate 14 REAR HUB AND WHEEL FITTINGS 'A' GROUP (SWINGING ARM FRAME)

Plate Ref. Number	Model	Part No.	Description	Number per set
	'A' Group	42–6011	Rear wheel complete (less brake and tyre)	1
1	'A' Group	2–440	Rear brake operating lever nut	1
2	'A' Group	66–4708	Rear brake operating lever washer (shakeproof)	1
3	'A' Group	15–431	Rear brake operating lever washer (plain)	1
4	'A' Group	65–5674	Cam bearing oil hole clip	1
5	'A' Group	21–431	Anchor strap bolt nut	1
6	'A' Group	2–130	Anchor strap bolt washer (plain)	1
7	'A' Group	42–6036	Rear brake anchor strap	1
8	'A' Group	35–698	Anchor strap bolt split pin	1
9	'A' Group	42–6037	Rear brake anchor strap bolt	1
10	'A' Group	42–6034	Rear brake cam	1
11	'A' Group	35–6436	Brake shoe lining rivet	14
12	'A' Group	65–5903	Brake shoe lining	2
13	'A' Group	42–9033	Transmission chain (rear)	1
14	'A' Group	65–5883	Rear hub ball bearing	1
15	'A' Group	67–6033	Hub ball journal shim	1
16	'A' Group	67–6034	Retaining spring ring	1
17	'A' Group	67–6030	Rear brake drum bearing sleeve	1
18	'A' Group	67–6101	Driving flange	1
19	'A' Group	65–5885	Hub ballrace retaining ring	1
20	'A' Group	27–6810	Spoke nipples	40
21	'A' Group	67–6005	Rear wheel rim	1
22	'A' Group	67–6017	Rear wheel spoke (nearside)	20
23	'A' Group	15–5290	Rear hub grease nipple	1
24	'A' Group	67–6136	Rear hub shell complete with bearings	1

Plate 14 REAR HUB AND WHEEL FITTINGS—'A' GROUP (SWINGING ARM FRAME)

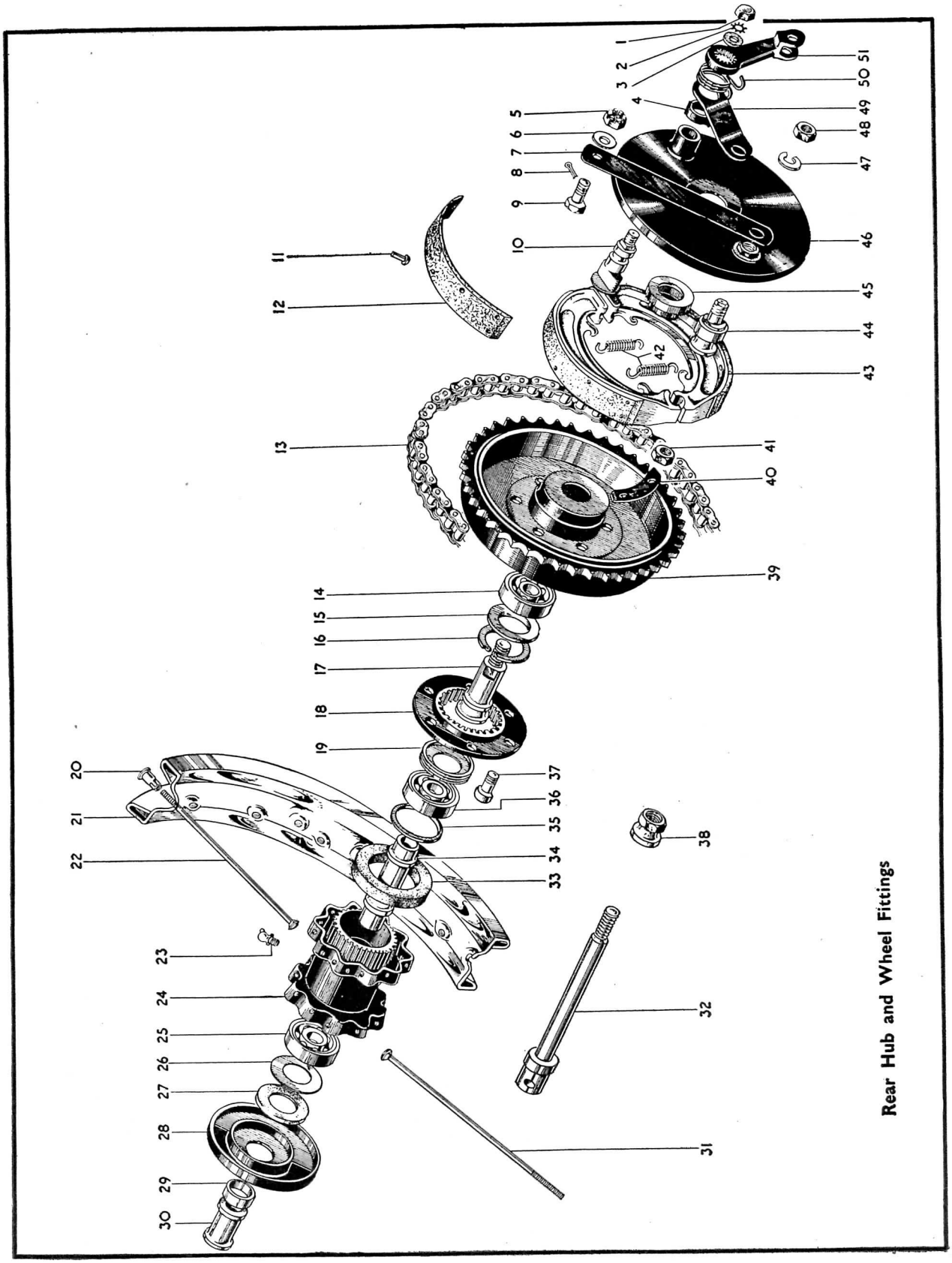

Plate 14—*continued* REAR HUB AND WHEEL FITTINGS 'A' GROUP (SWINGING ARM FRAME)

Plate Ref. Number	Model	Part No.	Description	Number per set
25	'A' Group	65–5883	Rear hub ball bearing	1
26	'A' Group	65–5887	Felt washer retaining ring	1
27	'A' Group	65–5886	Rear hub felt washer	1
28	'A' Group	67–6133	End cover	1
29	'A' Group	65–5890	Hub spindle distance collar	1
30	'A' Group	67–6028	Hub spindle distance sleeve	1
31	'A' Group	67–6016	Rear wheel spoke (offside)	20
32	'A' Group	67–6161	Rear hub spindle	1
33	'A' Group	67–6051	Hub shell washer (rubber)	1
34	'A' Group	67–6027	Hub spindle sleeve	1
35	'A' Group	65–5884	Hub bearing thrust washer	1
36	'A' Group	65–5883	Rear hub ball bearing	1
37	'A' Group	67–6038	Brake drum securing bolt	6
38	'A' Group	67–6031	Rear hub spindle nut	1
39	'A' Group	67–6149	Rear brake drum and chainwheel (42T)	1
40	'A' Group	67–6039	Brake drum bolt locking strip	3
41	'A' Group	3–720	Rear wheel securing bolt nut	6
42	'A' Group	65–5904	Rear brake spring	2
43	'A' Group	65–5901	Rear brake shoe complete	2
44	'A' Group	42–6033	Rear brake fulcrum pin	1
45	'A' Group	67–6032	Rear hub collar	1
46	'A' Group	42–6030	Rear brake cover plate complete with fixed fittings	1
47	'A' Group	65–5111	Rear brake fulcrum pin washer (spring)	1
48	'A' Group	24–7000	Rear brake fulcrum pin nut	1
49	'A' Group	67–6046	Rear brake outrigger strap	1
50	'A' Group	42–6046	Rear brake pedal return spring	1
51	'A' Group	42–6045	Rear brake operating lever	1

Plate 15 MUDGUARDS, OIL TANK, TOOL BOX AND CHAINGUARD 'A' GROUP (PLUNGER FRAME)

Plate Ref. Number	Model	Part No.	Description	Number per set
1	'A' Group	24–8784	Chainguard to crankcase fixing bolt washer (spring)	1
2	'A' Group	21–2880	Chainguard to crankcase fixing bolt	1
3	'A' Group	65–8422	Oil return pipe connection ferrule	1
4	'A' Group	65–2060	Oil return pipe connection (rubber)	1
5	'A' Group	65–8422	Oil return pipe connection ferrule	1
6	'A' Group	65–8420	Oil return pipe connection	1
7	'A' Group	65–8424	Oil return pipe nut	1
8	'A' Group	65–8421	Oil return pipe nut washer (fibre)	1
9	'A' Group	15–447	Front stand fixing bolt nut	2
10	A7 and A10	67–6530	Front stand complete	1
11	'A' Group	2–1934	Front stand fork end fixing bolt	2
12	'A' Group	24–8784	Front stand fork end fixing bolt washer (spring)	2
13	'A' Group	2–1616	Front stand fork end fixing bolt nut	2
14	'A' Group	2–2395	Front mudguard support bridge fixing bolt nut	2
15	'A' Group	2–1462	Front mudguard support bridge fixing bolt washer (spring)	2
16	'A' Group	2–1462	Front mudguard stay fixing bolt washer (spring)	2
17	'A' Group	2–2395	Front mudguard stay fixing bolt nut	2
18	A7, A10	67–6546	Front mudguard bridge stay insulator	2
19	'A' Group	65–6606	Front mudguard support bridge	1
20	'A' Group	28–2338	Support bridge bottom fixing bolt	2
21	'A' Group	2–1616	Front mudguard stay fork end fixing bolt nut	2
22	'A' Group	24–8784	Front mudguard stay fork end fixing bolt washer (spring)	2
23	'A' Group	15–7354	Front mudguard stay fork end fixing bolt	2
24	A7 and A10	67–6544	Front mudguard stay	1
25	A7 and A10	67–6547	Front mudguard stay insulator	2
26	A7 and A10	67–6543	Front mudguard with fixed fittings	1
27	'A' Group	15–7161	Front mudguard fixing bolt	2

Plate 15 MUDGUARDS, OIL TANK, TOOLBOX AND CHAINGUARD 'A' GROUP (PLUNGER FRAME)

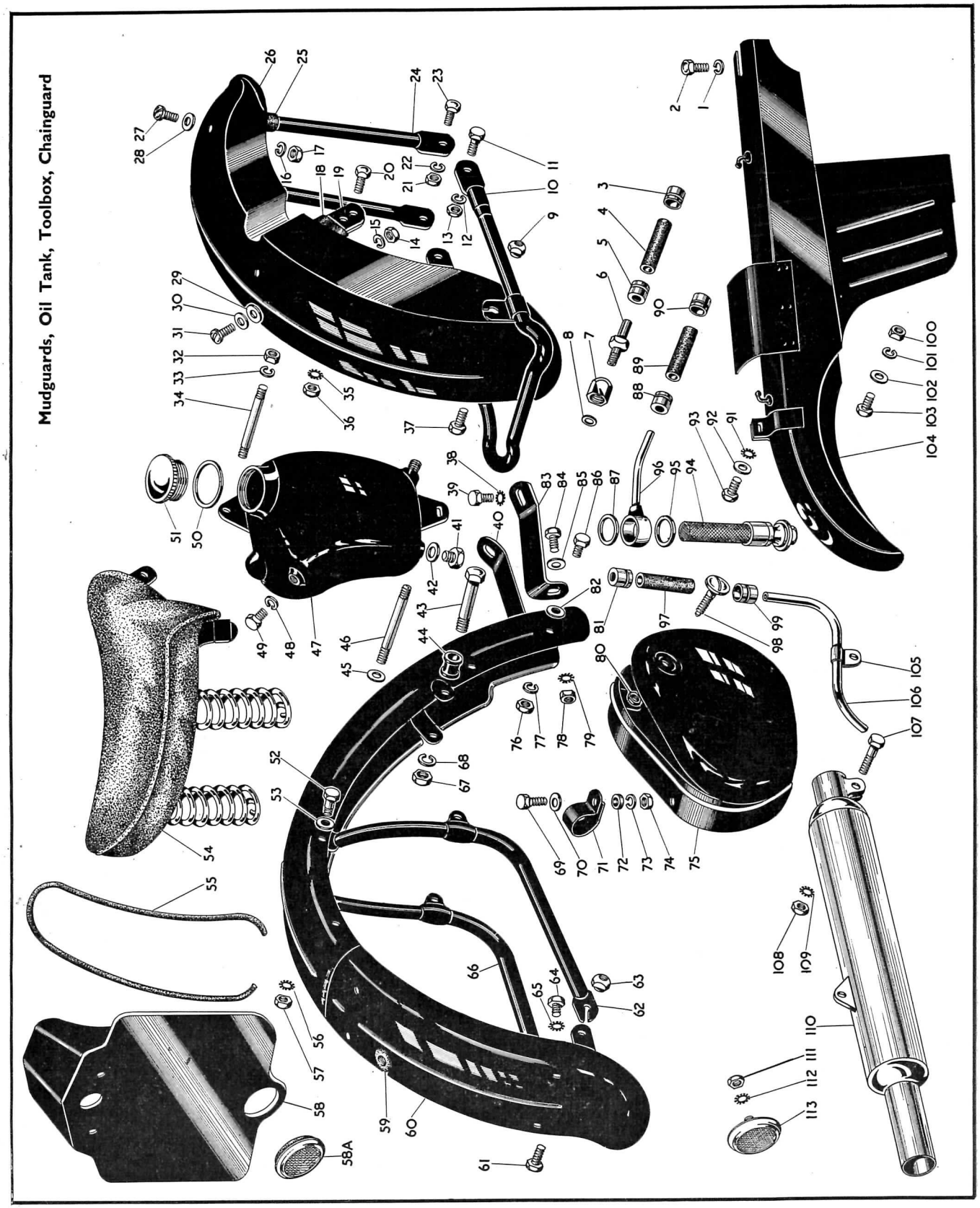

Plate 15—*continued*

MUDGUARDS, OIL TANK, TOOL BOX AND CHAINGUARD—'A' GROUP (PLUNGER FRAME)

Plate Ref. Number	Model	Part No.	Description	Number per set
28	'A' Group	27–8560	Front mudguard fixing bolt washer (plain)	2
29	'A' Group	66–7518	Front mudguard support bridge fixing bolt washer (fibre)	2
30	'A' Group	27–8560	Front mudguard support bridge fixing bolt washer	2
31	'A' Group	15–7161	Front mudguard support bridge fixing bolt	2
32	'A' Group	2–49	Oil tank and air cleaner fixing stud nut	4
33	'A' Group	24–8784	Oil tank and air cleaner fixing stud washer (spring)	4
34	'A' Group	29–4100	Oil tank and air cleaner fixing stud (top)	1
35	'A' Group	36–382	Support bridge bottom fixing bolt washer (shakeproof)	4
36	'A' Group	2–49	Support bridge bottom fixing bolt nut	4
37	'A' Group	2–1354	Front stand fixing bolt	2
38	'A' Group	36–382	Mudguard chainstay bridge bolt washer (shakeproof)	2
39	'A' Group	67–8313	Mudguard chainstay bridge bolt	2
40	'A' Group	67–6766	Mudguard front bracket (nearside)	1
41	'A' Group	2–84	Oil tank drain plug	1
42	'A' Group	2–100	Oil tank drain plug washer	1
43	'A' Group	67–4030	Mudguard fixing bolt (seatstay)	2
44	'A' Group	67–6761	Mudguard fixing bolt (seatstay) spacing washer	2
45	'A' Group	2–923	Oil tank and air cleaner fixing stud washer	2
46	'A' Group	29–7670	Oil tank and air cleaner fixing stud (bottom)	1
47	'A' Group	67–8334	Oil tank with fixed fittings	1
48	'A' Group	24–8784	Oil tank fixing bolt washer (spring)	1
49	'A' Group	67–8313	Oil tank fixing bolt	1
50	'A' Group	67–42	Oil tank filler cap washer (fibre)	1
51	'A' Group	65–8500	Oil tank filler cap	1
52	'A' Group	24–6770	Mudguard support bracket stay bolt	2
53	'A' Group	2–923	Mudguard support bracket stay bolt washer	2
54	'A' Group	67–9054	Saddle	1
55	'A' Group	67–6851	Rear number plate rubber extrusion	1
56	'A' Group	36–382	Mudguard support bracket stay bolt washer (shakeproof)	2
57	'A' Group	2–49	Mudguard support bracket stay bolt nut	2
58	'A' Group	67–6830	Rear number plate complete	1
	'A' Group	67–6830	Rear number plate complete (1955 models) (with hole to suit screw-on type reflector)	1
58A	'A' Group	67–9067	Rear reflector	1
59	'A' Group	67–6839	Rear mudguard tail lamp wiring grommet	2
60	'A' Group	67–6841	Rear mudguard with fixed fittings	1
61	'A' Group	2–1354	Mudguard support bolt (bottom)	2
62	'A' Group	67–6772	Mudguard support complete (offside)	1
63	'A' Group	15–447	Mudguard support bolt nut (bottom)	2
64	'A' Group	2–220	Rear number plate fixing bolt	4
65	'A' Group	29–541	Rear number plate fixing bolt washer (shakeproof)	4
66	'A' Group	67–6774	Mudguard support complete (nearside)	1
67	'A' Group	2–449	Mudguard fixing bolt (seatstay) nut	2
68	'A' Group	2–522	Mudguard fixing bolt (seatstay) washer (spring)	2
69	'A' Group	15–4207	Toolbox fixing clip bolt	1
70	'A' Group	27–8560	Toolbox fixing clip bolt washer	1
71	'A' Group	24–8927	Toolbox fixing clip	1
72	'A' Group	2–6537	Toolbox fixing clip distance washer	1
73	'A' Group	2–1462	Toolbox fixing clip bolt washer (spring)	1
74	'A' Group	67–1710	Toolbox fixing clip bolt nut	1
75	'A' Group	67–9002	Toolbox complete	1
76	'A' Group	2–2395	Toolbox to mudguard fixing bolt nut	2
77	'A' Group	2–1462	Toolbox to mudguard fixing bolt washer (spring)	2
78	'A' Group	2–49	Mudguard front bracket fixing bolt nut	2
79	'A' Group	36–382	Mudguard front bracket fixing bolt washer (shakeproof)	2
80	'A' Group	2–1027	Toolbox lid fixing screw nut	1
81	'A' Group	65–8422	Oil breather pipe connection ferrule	1
82	'A' Group	27–8560	Toolbox to mudguard fixing bolt washer	2
83	'A' Group	67–6767	Mudguard front bracket (offside)	1
84	'A' Group	1–5069	Mudguard front bracket fixing bolt	2
85	'A' Group	2–923	Mudguard front bracket fixing bolt washer	2
86	'A' Group	2–204	Toolbox to mudguard fixing bolt	2
87	'A' Group	29–7971	Oil feed banjo washer (fibre)	1
88	'A' Group	65–8422	Oil feed pipe connection ferrule	1
89	'A' Group	65–2060	Oil feed pipe connection (rubber)	1
90	'A' Group	65–8422	Oil feed pipe connection ferrule	1
91	'A' Group	36–382	Chainguard rear fixing bolt washer (shakeproof)	1
92	'A' Group	2–923	Chainguard rear fixing bolt washer (plain)	1
93	'A' Group	1–5069	Chainguard rear fixing bolt	1
94	'A' Group	29–7962	Oil tank filter complete	1

Plate 15—*continued* MUDGUARDS, OIL TANK, TOOL BOX AND CHAINGUARD—'A' GROUP (PLUNGER FRAME)

Plate Ref. Number	Model	Part No.	Description	Number per set
95	'A' Group	29–7971	Oil feed banjo washer (fibre)	1
96	'A' Group	67–8309	Oil feed pipe complete	1
97	'A' Group	65–2060	Oil breather pipe connection (rubber)	1
98	'A' Group	29–9132	Toolbox lid fixing screw complete	1
99	'A' Group	65–8422	Oil breather pipe connection ferrule	1
100	'A' Group	2–2395	Chainguard bottom clip bolt nut	1
101	'A' Group	2–1462	Chainguard bottom clip bolt washer (spring)	1
102	'A' Group	27–8560	Chainguard bottom clip bolt washer (plain)	1
103	'A' Group	2–204	Chainguard bottom clip bolt	1
104	'A' Group	67–7778	Rear chainguard with fixed fittings	1
105	'A' Group	67–8326	Oil tank breather pipe support clip	1
106	'A' Group	67–8324	Oil tank breather pipe extension	1
107	'A' Group	24–7343	Silencer inlet tube clip bolt	2
108	'A' Group	2–2395	Silencer inlet tube clip bolt nut	2
109	'A' Group	29–541	Silencer inlet tube clip bolt washer (shakeproof)	2
110	'A' Group	67–2711	Silencer complete	2
111	'A' Group	21–5102	Rear number plate reflector nut (1955 models)	1
112	'A' Group	29–541	Rear number plate reflector washer (shakeproof) (1955 models)	1
113	'A' Group	67–9069	Rear reflector (1955 models)	1

Plate 16 DUAL SEAT, PETROL TANK, HANDLEBAR AND BATTERY CARRIER—'A' GROUP (PLUNGER FRAME)

Plate Ref. Number	Model	Part No.	Description	Number per set
1	'A' Group	67–9087	Dual seat complete	1
2	A7	67–8126	Petrol tank	1
	Star Twin	67–8104	Petrol tank	1
3	'A' Group	67–8108	Petrol tank front mounting tube bush (rubber)	2
4	'A' Group	67–8109	Petrol tank front mounting tube	2
5	'A' Group	27–5676	Petrol tank front fixing bolt washer	2
6	A7 and Star Twin	65–8326	Petrol tank front fixing bolt	1
7	'A' Group	29–7898	Petrol tank filler cap	1
8	'A' Group	29–8810	Front brake control complete (less cable and cover)	1
9	'A' Group	65–8501	Throttle twist grip	1
10	'A' Group	66–8896	Air control complete (less cable and cover)	1
11	A7 and Star Twin	67–8521	Throttle cable and cover complete	1
	A10	67–8595	Throttle cable and cover complete	1
12	A7 and Star Twin	67–8555	Air control cable and cover complete	1
	A10	67–8592	Air control cable and cover complete	1
13	Star Twin	65–8714	Ignition control cable and cover complete (for use with manual control magneto)	1
14	Star Twin	66–8810	Ignition control lever complete (for use with manual control magneto)	1
15	'A' Group	65–8502	Dummy grip (left hand)	1
16	'A' Group	29–8820	Clutch control complete (less cable and cover)	1
17	'A' Group	67–8681	Clutch control cable and cover complete	1
18	'A' Group	65–4960	Handlebar complete (less controls)	1
19	A7 and Star Twin	65–8675	Front brake cable and cover complete	1
	A10	67–8610	Front brake cable and cover complete	1
20	'A' Group	66–4707	Petrol tank front fixing bolt washer (shakeproof)	1
21	'A' Group	2–46	Petrol tank front fixing bolt nut	1
22	A7 and A10	65–8317	Petrol tank badge screw	4
23	A7	65–8220	Petrol tank badge complete	2
23A	A7	42–8020	Petrol tank badge clip	2
24	A7	42–8034	Petrol tank badge screw nut	4
25	A7 and Star Twin	67–4596	Air cleaner and carburetter connection (rubber)	1
26	'A' Group	67–4588	Air cleaner and carburetter connection spring clip	1
27	'A' Group	65–2352	Battery carrier swivel block (plain)	1

Plate 16 **DUAL SEAT, PETROL TANK, HANDLEBAR AND BATTERY CARRIER 'A' GROUP (PLUNGER FRAME)**

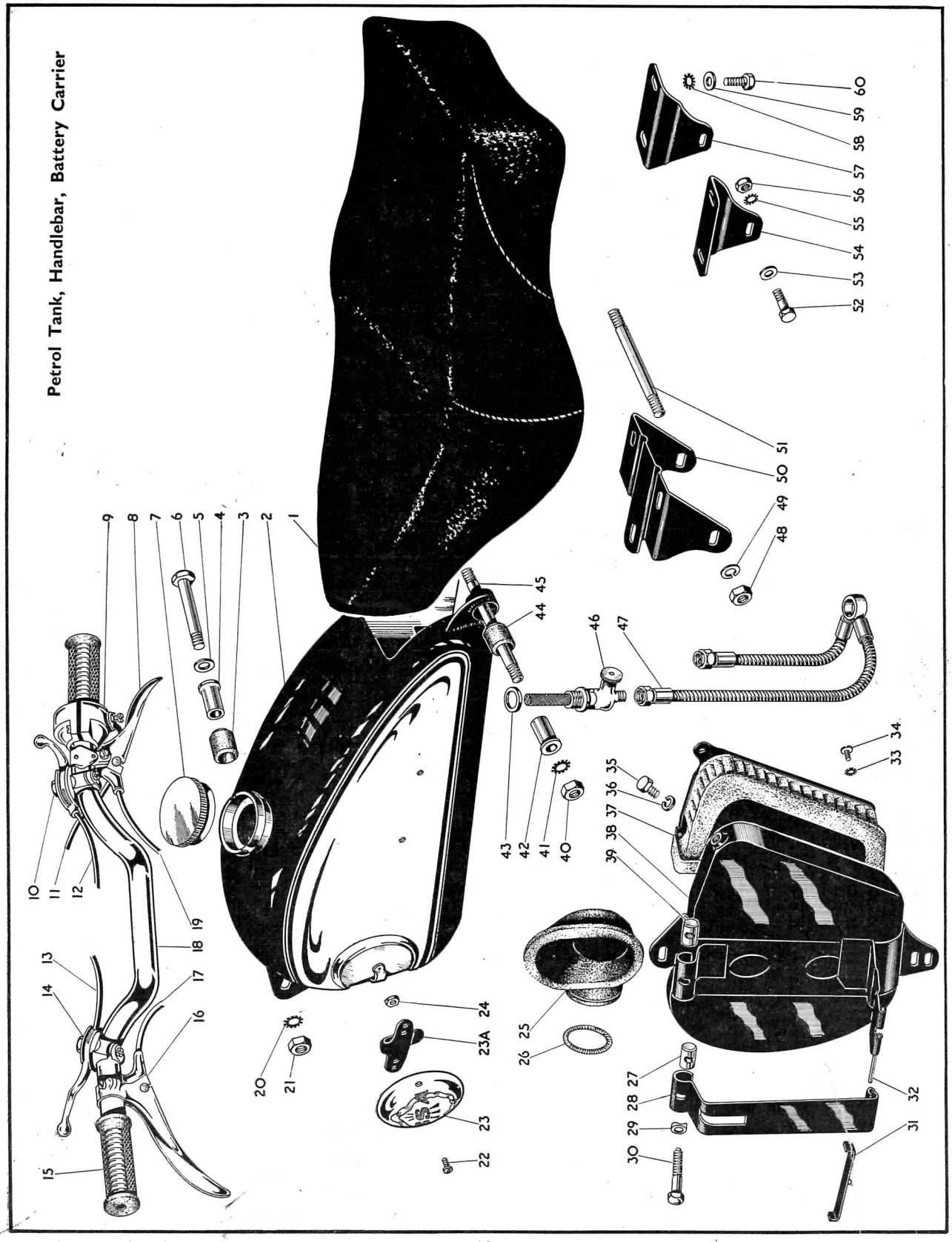

Plate 16—*continued* DUAL SEAT, PETROL TANK, HANDLEBAR AND BATTERY CARRIER—'A' GROUP (PLUNGER FRAME)

Plate Ref. Number	Model	Part No.	Description	Number per set
28	'A' Group	29–4657	Battery carrier strap	1
29	'A' Group	29–4662	Battery strap bolt saddle washer	1
30	'A' Group	29–4661	Battery strap bolt	1
31	'A' Group	29–4665	Battery locating strip complete	1
32	'A' Group	29–4664	Battery carrier hinge pin	1
33	'A' Group	29–3319	Air cleaner element fixing screw washer (shakeproof)	2
34	'A' Group	2–498	Air cleaner element fixing screw	3
35	'A' Group	67–8313	Air cleaner fixing screw	1
36	'A' Group	24–8784	Air cleaner fixing screw washer (spring)	1
37	'A' Group	67–4600	Air cleaner element	1
38	'A' Group	67–4594	Air cleaner and battery carrier complete (less element)	1
39	'A' Group	65–2353	Battery carrier swivel block (tapped)	1
40	'A' Group	2–46	Petrol tank rear support stud nut	2
41	'A' Group	66–4707	Petrol tank rear support stud washer (shakeproof)	2
42	'A' Group	67–8109	Petrol tank rear mounting tube	2
43	'A' Group	24–8504	Petrol tap washer (fibre)	2
44	'A' Group	67–8108	Petrol tank rear mounting tube bush (rubber)	2
45	'A' Group	67–8110	Petrol tank rear support stud	1
46	'A' Group	67–8092	Petrol tap	2
47	A7, and Star Twin	67–8087	Flexible petrol pipe complete	1
	A10	67–8088	Flexible petrol pipe complete	1
48	'A' Group	15–541	Dual seat front support bracket fixing stud nut	2
49	'A' Group	15–716	Dual seat front support bracket fixing stud washer (spring)	2
50	'A' Group	67–9089	Dual seat front support bracket	1
51	'A' Group	67–9095	Dual seat front support fixing stud	1
52	'A' Group	27–6037	Dual seat rear support bracket and mudguard stay fixing bolt	2
53	'A' Group	2–923	Dual seat rear support bracket and mudguard stay fixing bolt washer	2
54	'A' Group	67–9094	Dual seat rear support bracket (nearside)	1
55	'A' Group	36–382	Dual seat rear support bracket and mudguard stay fixing bolt washer (shakeproof)	2
56	'A' Group	2–49	Dual seat rear support bracket and mudguard stay fixing bolt nut	2
57	'A' Group	67–9093	Dual seat rear support bracket (offside)	1
58	'A' Group	36–382	Dual seat fixing bolt washer (shakeproof)	7
59	'A' Group	2–923	Dual seat fixing bolt washer (plain)	7
60	'A' Group	2–129	Dual seat fixing bolt	7

Plate 17 FRONT MUDGUARD, PETROL TANK AND BRAKE ROD 'A' GROUP (PLUNGER FRAME)

Plate Ref. Number	Model	Part No.	Description	Number per set
1	A10	67–4589	Air cleaner and carburetter connection (rubber)	1
2	A10	67–8111	Petrol tank rear support stud distance collar	2
3	A10	67–8105	Petrol tank	1
4	A10	27–5690	Petrol tank rear support stud	1
5	A10	67–8085	Petrol tank stiffening plate	1
6	A10	36–382	Petrol tank stiffening plate stud washer (shakeproof)	2
7	A10	2–923	Petrol tank stiffening plate stud washer (plain)	2
8	A10	2–49	Petrol tank stiffening plate stud nut	2
9	'A' Group	2–79	Knee grip screw	4
10	'A' Group	65–8206	Knee grip (left hand)	1
	'A' Group	65–8205	Knee grip (right hand)	1
11	Star Twin	67–8116	Petrol tank badge	2
12	Star Twin	65–8201	Petrol tank badge screw	4
13	A10	67–8071	Petrol tank badge (nearside)	1
	A10	67–8070	Petrol tank badge (offside)	1
	A10	67–8076	Petrol tank front fixing bolt	1
15	Star Twin	65–6576	Front number plate complete	1

Plate 17

FRONT MUDGUARD, PETROL TANK AND BRAKE ROD 'A' GROUP (PLUNGER FRAME)

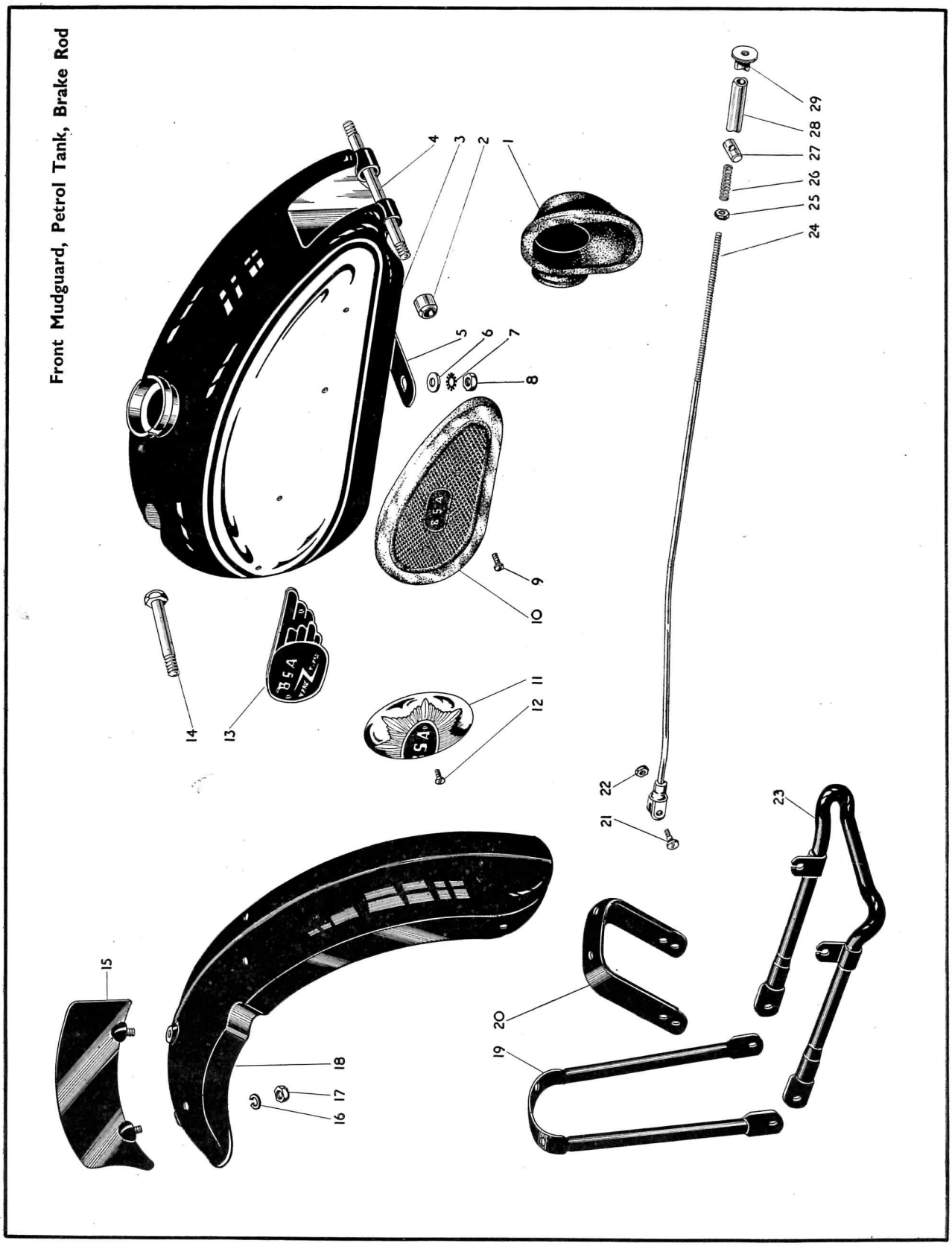

Plate 17—*continued* FRONT MUDGUARD, PETROL TANK AND BRAKE ROD—'A' GROUP (PLUNGER FRAME)

Plate Ref. Number	Model	Part No.	Description	Number per set
16	Star Twin	2–1462	Front number plate stud washer (spring)	2
17	Star Twin	2–2395	Front number plate stud nut	2
18	Star Twin	65–6605	Front mudguard with fixed fittings	1
19	Star Twin	65–6607	Front mudguard stay	1
20	Star Twin	65–6606	Front mudguard support bridge	1
21	'A' Group	2–510	Rear brake rod toggle end screw	1
22	'A' Group	2–443	Rear brake rod toggle end screw nut	1
23	Star Twin	65–6608	Front stand complete	1
24	'A' Group	67–7033	Rear brake rod complete	1
25	'A' Group	2–2395	Rear brake rod abutment nut	1
26	'A' Group	15–1312	Rear brake rod spring	1
27	'A' Group	65–6274	Rear brake rod swivel pin	1
28	'A' Group	67–7031	Rear brake rod adjusting nut extension tube	1
29	'A' Group	29–7368	Rear brake rod adjusting nut	1

Plate 18 MUDGUARDS, OIL TANK AND REAR CHAINGUARD 'A' GROUP (SWINGING ARM FRAME)

Plate Ref. Number	Model	Part No.	Description	Number per set
1	'A' Group	42–7701	Rear chainguard complete	1
2	'A' Group	65–292	Rear chainguard fixing bolt	1
3	'A' Group	2–923	Rear chainguard fixing bolt washer (plain)	1
4	'A' Group	30–1194	Rear chainguard distance piece	1
5	'A' Group	2–49	Rear chainguard fixing bolt nut	1
6	'A' Group	24–8784	Rear chainguard fixing bolt washer (spring)	1
7	'A' Group	2–49	Rear chainguard long fixing bolt nut	1
8	'A' Group	24–8784	Rear chainguard long fixing bolt washer (spring)	1
9	'A' Group	2–353	Rear chainguard fixing bolt (short)	2
10	'A' Group	24–8784	Rear chainguard short fixing bolt washer (spring)	2
11	A7 Shooting Star	24–7178	Front mudguard stiffener screw	2
12	A7 Shooting Star	2–2580	Front mudguard stiffener screw washer (plain)	2
13	A7 Shooting Star	67–6560	Front mudguard stiffener	1
14	A7 Shooting Star	2–1462	Front mudguard stiffener screw washer (spring)	2
15	A7 Shooting Star	2–2395	Front mudguard stiffener screw nut	2
16	A7 Shooting Star	67–6558	Front stand complete	1
17	'A' Group	2–1616	Front mudguard stay fork end fixing bolt nut	2
18	'A' Group	24–8784	Front mudguard stay fork end fixing bolt washer (spring)	2
19	A7 Shooting Star	67–6557	Front mudguard stay	1
20	'A' Group	2–923	Front mudguard stay fork end fixing bolt washer (plain)	2
21	'A' Group	2–923	Front stand fork end fixing bolt washer (plain)	2
22	'A' Group	15–7354	Front mudguard stay fork end fixing bolt	2
23	'A' Group	2–1934	Front stand fork end fixing bolt	2
24	A7 Shooting Star	32–194	Support bridge bottom fixing bolt (offside)	2
25	'A' Group	24–8784	Front stand fork end fixing bolt washer (spring)	2
26	'A' Group	2–1616	Front stand fork end fixing bolt nut	2
27	A7 Shooting Star	2–2580	Front stand release bolt washer (thin)	1
28	A7 Shooting Star	2–14	Front stand release bolt	1
29	'A' Group	2–1462	Front mudguard support bridge fixing screw washer (spring)	2
30	'A' Group	2–2395	Front mudguard support bridge fixing screw nut	2
31	'A' Group	2–49	Support bridge bottom fixing bolt nut	4
32	'A' Group	36–382	Support bridge bottom fixing bolt washer (shakeproof)	4
33	A7 Shooting Star	67–6559	Front mudguard support bridge	1
34	'A' Group	2–2395	Front mudguard stay fixing screw nut	2
35	'A' Group	2–1462	Front mudguard stay fixing screw washer (spring)	2
36	A7 Shooting Star	2–2395	Front number plate fixing stud nut	2
37	A7 Shooting Star	2–1462	Front number plate fixing stud washer (spring)	2
38	'A' Group	27–8560	Front mudguard stay fixing screw washer (plain)	2
39	A7 Shooting Star	65–6576	Front number plate complete	1
40	'A' Group	15–7161	Front mudguard stay fixing screw	2

Plate 18 **MUDGUARDS, OIL TANK AND REAR CHAINGUARD**
'A' GROUP (SWINGING ARM FRAME)

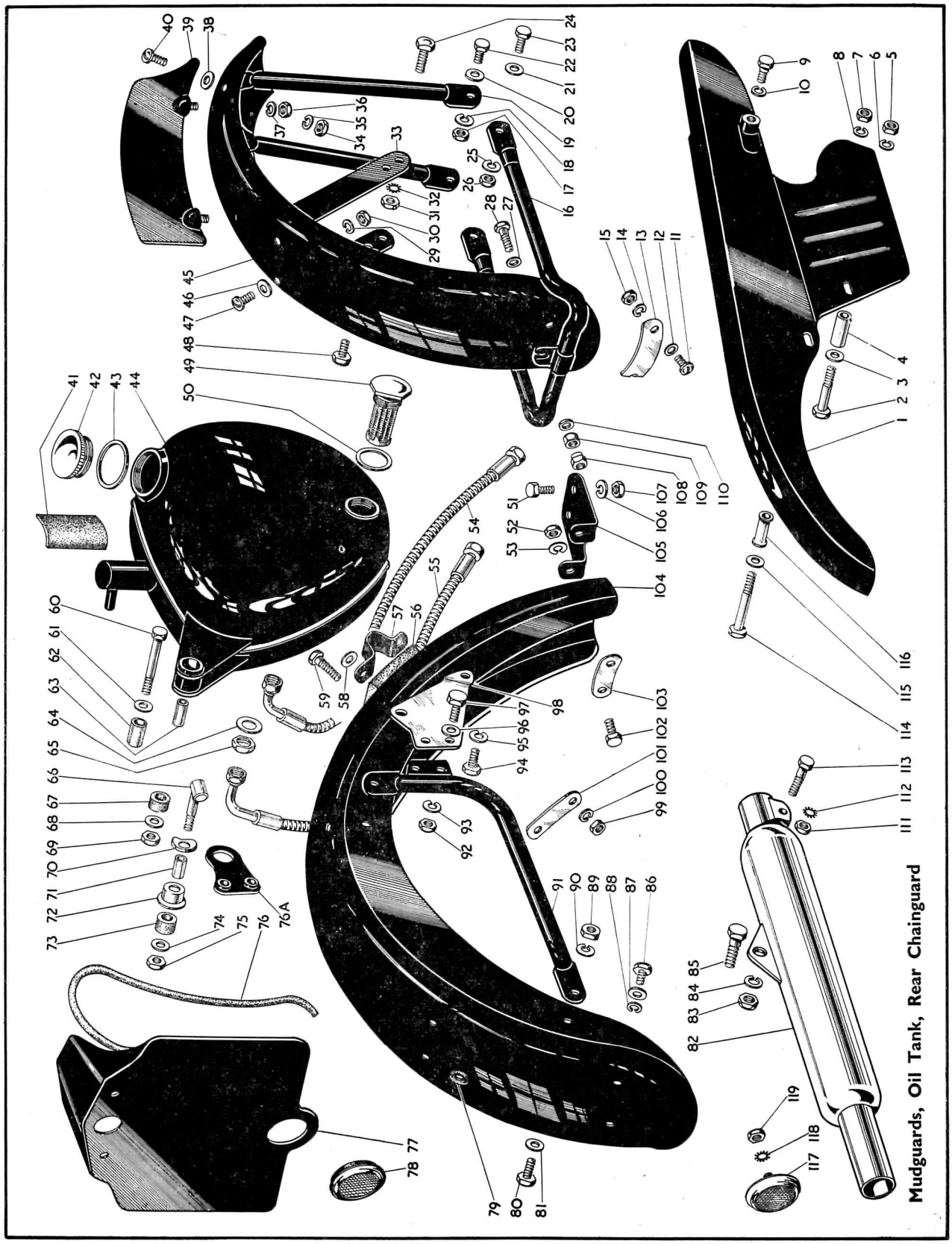

Plate 18—*continued* MUDGUARDS, OIL TANK AND REAR CHAINGUARD—'A' GROUP (SWINGING ARM FRAME)

Plate Ref. Number	Model	Part No.	Description	Number per set
41	'A' Group	42–8342	Oil tank mounting strip (rubber)	4
42	'A' Group	65–8500	Oil tank filler cap	1
43	'A' Group	67–42	Oil tank filler cap washer (fibre)	1
44	'A' Group	42–8367	Oil tank with fixed fittings	1
45	A7 Shooting Star	67–6556	Front mudguard with fixed fittings	1
46	'A' Group	27–8560	Front mudguard support bridge fixing screw washer (plain)	2
47	'A' Group	15–7161	Front mudguard support bridge fixing screw	2
48	A7 A10 Swinging Arm	28–2338	Support bridge bottom fixing bolt	2
	A7 Shooting Star	28–2338	Support bridge bottom fixing bolt (nearside)	2
49	'A' Group	42–8334	Oil tank filter assembly	1
50	'A' Group	42–8343	Oil tank filter plug washer (fibre)	1
51	'A' Group	15–7354	Rear mudguard bottom bracket frame bolt	2
52	'A' Group	2–49	Rear mudguard bottom bracket fixing bolt nut	2
53	'A' Group	24–8784	Rear mudguard bottom bracket fixing bolt washer (spring)	2
54	'A' Group	42–8346	Oil feed pipe (armoured)	1
55	'A' Group	42–8347	Oil return pipe (armoured)	1
56	'A' Group	42–6853	Rear mudguard distance piece (rubber)	1
	'A' Group	42–6853	Rear mudguard distance piece (rubber) (1955 models)	2
57	'A' Group	42–6759	Rear mudguard fixing clip	1
	'A' Group	42–6759	Rear mudguard fixing clip (1955 models)	2
58	'A' Group	2–525	Rear mudguard fixing clip bolt washer (plain)	2
	'A' Group	2–525	Rear mudguard fixing clip bolt washer (plain) (1955 models)	4
59	'A' Group	24–8328	Rear mudguard fixing clip bolt	2
	'A' Group	24–8328	Rear mudguard fixing clip bolt (1955 models)	4
60	'A' Group	29–5289	Oil tank top fixing bolt	1
61	'A' Group	2–537	Oil tank top fixing bolt washer (plain)	1
62	'A' Group	42–8339	Oil tank top fixing bolt distance tube	1
63	'A' Group	42–8331	Oil tank top fixing bolt spacing tube	1
64	'A' Group	15–203	Rocker feed pipe banjo washer (fibre)	1
65	'A' Group	42–8340	Rocker feed pipe banjo locknut	1
66	'A' Group	42–8326	Oil tank front fixing bolt complete	1
67	'A' Group	42–8341	Oil tank top fixing bolt mounting pad (rubber)	2
68	'A' Group	2–537	Oil tank top fixing bolt washer (plain)	1
69	'A' Group	2–49	Oil tank top fixing bolt nut	1
70	'A' Group	42–8329	Oil tank front fixing bolt saddle washer	1
71	'A' Group	42–8331	Oil tank front fixing bolt spacing tube	1
72	'A' Group	42–8330	Oil tank front fixing bolt bracket cup	1
73	'A' Group	42–8341	Oil tank front fixing bolt mounting pad (rubber)	1
74	'A' Group	2–537	Oil tank front fixing bolt washer (plain)	1
75	'A' Group	2–49	Oil tank front fixing bolt nut	1
76	'A' Group	67–6851	Rear number plate rubber extrusion	1
76A	'A' Group	42–8351	Oil tank fixing bracket complete	1
77	'A' Group	67–6830	Rear number plate complete	1
	'A' Group	67–6830	Rear number plate complete (1955 models) (with hole to suit screw-on type reflector)	1
78	'A' Group	67–9067	Rear reflector	1
79	'A' Group	67–6839	Rear mudguard tail lamp wiring grommet	2
80	'A' Group	28–2338	Rear mudguard stay bolt	4
81	'A' Group	2–923	Rear mudguard stay bolt washer (plain)	4
82	'A' Group	42–2774	Silencer complete (offside)	1
	'A' Group	42–2775	Silencer complete (nearside)	1
83	'A' Group	2–449	Silencer bracket fixing bolt nut (when pillion footrests not fitted)	2
84	'A' Group	2–522	Silencer bracket fixing bolt washer (spring) (when pillion footrests not fitted)	2
85	'A' Group	2–803	Silencer bracket fixing bolt (when pillion footrests not fitted)	2
86	'A' Group	2–220	Rear number plate fixing bolt	4
87	'A' Group	27–8560	Rear number plate fixing bolt washer (plain)	4
88	'A' Group	2–1462	Rear number plate fixing bolt washer (spring)	4
89	'A' Group	2–49	Rear mudguard stay bolt nut	4
90	'A' Group	24–8784	Rear mudguard stay bolt washer (spring)	4
91	'A' Group	42–6824	Rear mudguard stay complete (offside)	1
	'A' Group	42–6822	Rear mudguard stay complete (nearside)	1
	'A' Group	42–6858	Rear mudguard stay complete (nearside) (1955 models)	1
	'A' Group	42–6860	Rear mudguard stay complete (offside) (1955 models)	1
92	'A' Group	2–49	Rear mudguard stay frame bracket bolt nut	4
93	'A' Group	24–8784	Rear mudguard stay frame bracket bolt washer (spring)	4
94	'A' Group	67–8313	Rear mudguard stay frame bracket bolt	2
95	'A' Group	24–8784	Rear mudguard stay frame bracket bolt washer (spring)	2
96	'A' Group	2–923	Rear mudguard stay frame bracket bolt washer (plain)	4
97	'A' Group	28–2338	Rear mudguard stay frame bracket bolt	4

Plate 18—*continued* MUDGUARDS, OIL TANK AND REAR CHAINGUARD—'A' GROUP (SWINGING ARM FRAME)

Plate Ref. Number	Model	Part No.	Description	Number per set
98	'A' Group	42–6761	Rear mudguard stay frame bracket (offside)	1
	'A' Group	42–6762	Rear mudguard stay frame bracket (nearside)	1
99	'A' Group	2–2395	Rear mudguard fixing clip bolt nut	2
	'A' Group	2–2395	Rear mudguard fixing clip bolt nut (1955 models)	4
100	'A' Group	2–1462	Rear mudguard fixing clip bolt nut washer (spring)	2
	'A' Group	2–1462	Rear mudguard fixing clip bolt nut washer (spring) (1955 models)	4
101	'A' Group	42–6782	Rear mudguard clip stiffening plate	1
	'A' Group	42–6782	Rear mudguard clip stiffening plate (1955 models)	2
102	'A' Group	24–7148	Rear mudguard bottom bracket fixing bolt	2
103	'A' Group	42–6783	Rear mudguard bottom bracket stiffening plate	1
104	'A' Group	42–6841	Rear mudguard complete with fixed fittings	1
	'A' Group	42–6839	Rear mudguard complete with fixed fittings (drilled for handrail)	1
	'A' Group	42–6856	Rear mudguard complete with fixed fittings (1955 models)	1
105	'A' Group	42–6820	Rear mudguard bottom bracket	1
106	'A' Group	24–8784	Rear mudguard bottom bracket frame bolt washer (spring)	2
107	'A' Group	2–49	Rear mudguard bottom bracket frame bolt nut	2
108	A7 Shooting Star	15–447	Front stand release bolt nut	1
109	A7 Shooting Star	27–410	Front stand release bolt locknut	1
110	A7 Shooting Star	2–6537	Front stand release bolt washer (thick)	1
111	'A' Group	2–2395	Silencer inlet tube clip bolt nut	2
112	'A' Group	29–541	Silencer inlet tube clip bolt washer (shakeproof)	2
113	'A' Group	24–7343	Silencer inlet tube clip bolt	2
114	'A' Group	33–4089	Rear chainguard fixing bolt (long)	1
115	'A' Group	2–923	Rear chainguard fixing bolt washer (plain)	1
116	'A' Group	42–7703	Rear chainguard fixing bolt distance tube (short)	1
117	'A' Group	67–9069	Rear reflector (1955 models)	1
118	'A' Group	29–541	Rear number plate reflector washer (shakeproof) (1955 models)	1
119	'A' Group	21–5102	Rear number plate reflector nut (1955 models)	1

Plate 19 PETROL TANK, HANDLEBAR, FRONT MUDGUARD, TOOL BOX AND REAR BRAKE CONTROL — 'A' GROUP (SWINGING ARM FRAME)

Plate Ref. Number	Model	Part No.	Description	Number per set
1	'A' Group	29–7368	Rear brake rod adjuster ferrule	1
2	'A' Group	65–6274	Rear brake lever swivel pin	1
3	'A' Group	15–1312	Rear brake rod spring	1
4	'A' Group	2–2395	Rear brake rod spring nut	1
5	'A' Group	42–7007	Rear brake rod complete	1
6	'A' Group	42–9038	Toolbox complete with fixed fittings	1
7	'A' Group	65–292	Toolbox top fixing bolt	1
8	'A' Group	24–8784	Toolbox top fixing bolt washer (spring)	1
9	'A' Group	42–4080	Toolbox fixing stud	2
10	'A' Group	2–49	Toolbox fixing stud nut	2
11	'A' Group	35–33	Toolbox fixing stud washer (spring)	2
12	'A' Group	42–8339	Toolbox top fixing bolt distance tube	1
13	'A' Group	2–49	Toolbox top fixing bolt nut	1
14	'A' Group	27–5674	Toolbox top fixing bolt washer (plain)	1
15	'A' Group	42–9061	Dual seat rear fixing bolt	2
16	'A' Group	2–923	Dual seat rear fixing bolt washer (plain)	2
17	'A' Group	35–33	Dual seat rear fixing bolt washer (spring)	2
18	'A' Group	42–6799	Dual seat rear support bridge	1
19	'A' Group	42–9072	Dual seat complete with brackets	1
20	'A' Group	2–49	Dual seat rear support bridge bolt nut	2
21	'A' Group	24–8784	Dual seat rear support bridge bolt washer (spring)	2
22	'A' Group	2–923	Dual seat rear support bridge bolt washer (plain)	2
23	'A' Group	15–7354	Dual seat rear support bridge bolt	2
24	'A' Group	65–8503	Twist grip rubber grip	1
25	'A' Group	65–8504	Twist grip rotor and rotor sleeve complete	1
26	'A' Group	24–9570	Twist grip friction spring screw	1

Plate 19 PETROL TANK, HANDLEBAR, FRONT MUDGUARD, TOOLBOX AND REAR BRAKE CONTROL—'A' GROUP (SWINGING ARM FRAME)

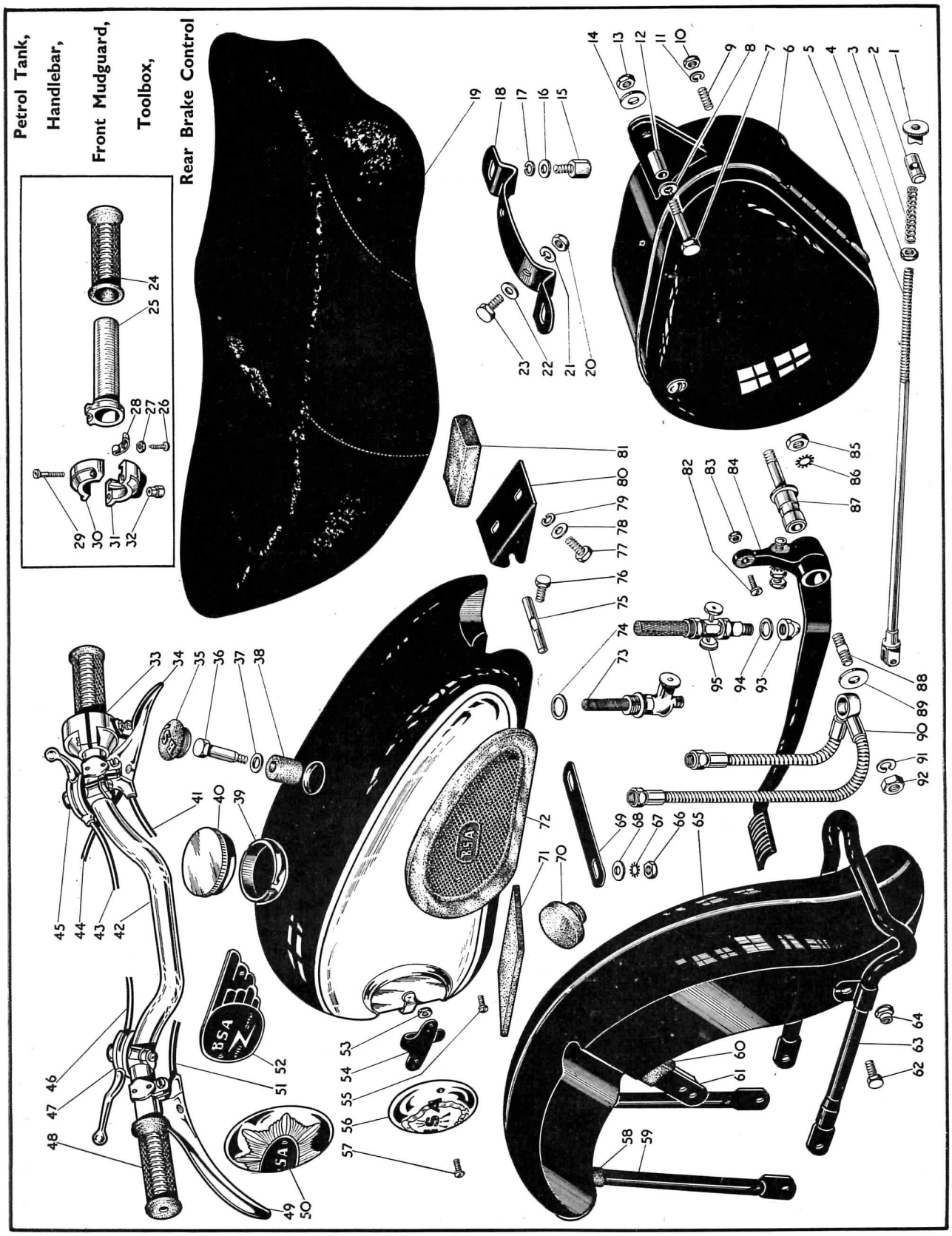

Plate 19—*cont.* PETROL TANK, HANDLEBAR, FRONT MUDGUARD, TOOL BOX AND REAR BRAKE CONTROL —'A' GROUP (SWINGING ARM FRAME)

Plate Ref. Number	Model	Part No.	Description	Number per set
27	'A' Group	24–9571	Twist grip friction spring screw locknut	1
28	'A' Group	24–9569	Twist grip friction spring	1
29	'A' Group	24–9573	Twist grip body screw	2
30	'A' Group	65–8505	Twist grip body (top half)	1
31	'A' Group	65–8506	Twist grip body (bottom half)	1
32	'A' Group	24–9572	Twist grip cable stop	1
33	'A' Group	65–8501	Throttle twist grip complete (less cable and cover)	1
34	'A' Group	29–8810	Front brake control complete (less cable and cover)	1
35	'A' Group	42–8010	Petrol tank rubber grommet	1
36	'A' Group	42–8011	Petrol tank fixing bolt	1
37	'A' Group	2–1945	Petrol tank fixing bolt washer (plain)	1
38	'A' Group	42–8012	Petrol tank mounting rubber (top)	1
39	A7 Swinging Arm	42–8046	Petrol tank (4 gallon)	1
	A7 Shooting Star	42–8047	Petrol tank (4 gallon)	1
	A10 Swinging Arm	42–8048	Petrol tank (4 gallon)	1
	A7 Swinging Arm	42–8043	Petrol tank (2 gallon)	1
	A7 Shooting Star	42–8044	Petrol tank (2 gallon)	1
	A10 Swinging Arm	42–8045	Petrol tank (2 gallon)	1
40	'A' Group	29–7898	Petrol tank filler cap	1
41	'A' Group	67–8610	Front brake cable and cover complete	1
42	'A' Group	65–4960	Handlebar (less controls)	1
	A7 Swinging Arm			
43	A7 Shooting Star	67–8555	Air control cable and cover complete	1
	A10 Swinging Arm	67–8592	Air control cable and cover complete	1
	A7 Swinging Arm			
44	A7 Shooting Star	67–8521	Throttle control cable and cover complete	1
	A10 Swinging Arm	67–8595	Throttle control cable and cover complete	1
45	'A' Group	66–8896	Air control complete (less cable and cover)	1
46	A7 Shooting Star	65–8714	Ignition control cable and cover complete)	1
47	A7 Shooting Star	66–8810	Ignition control complete (less cable and cover)	1
48	'A' Group	65–8502	Dummy grip (left-hand bar)	1
49	'A' Group	29–8820	Clutch control complete (less cable and cover)	1
50	A7 Shooting Star	67–8116	Petrol tank badge	2
51	'A' Group	67–8681	Clutch control cable and cover complete	1
	A10 Swinging Arm	67–8071	Petrol tank badge (nearside)	1
52	A10 Swinging Arm	67–8070	Petrol tank badge (offside)	1
53	'A' Group	42–8034	Petrol tank badge clip screw nut	4
54	'A' Group	42–8020	Petrol tank badge clip	2
55	'A' Group	2–79	Knee grip fixing screw	4
56	A7 Swinging Arm	65–8220	Petrol tank badge	2
57	'A' Group	65–8317	Petrol tank badge clip screw	4
58	A7, A10 Swinging Arm	67–6547	Front mudguard stay insulator	2
59	A7, A10 Swinging Arm	67–6544	Front mudguard stay	1
60	A7, A10 Swinging Arm	67–6546	Front mudguard bridge stay insulator	2
61	A7, A10 Swinging Arm	65–6606	Front mudguard support bridge	1
62	A7, A10 Swinging Arm	2–1354	Front stand mudguard fixing bolt	2
63	A7, A10 Swinging Arm	67–6530	Front stand complete	1
64	A7, A10 Swinging Arm	15–447	Front stand mudguard fixing bolt nut	2
65	A7, A10 Swinging Arm	67–6543	Front mudguard complete with fixed fittings	1
66	'A' Group	2–49	Petrol tank stiffening plate stud nut	2
67	'A' Group	36–382	Petrol tank stiffening plate stud washer (shakeproof)	2
68	'A' Group	2–923	Petrol tank stiffening plate stud washer (plain)	2
69	'A' Group	42–8058	Petrol tank stiffening plate	1
70	'A' Group	42–8052	Petrol tank anti-roll rubber	2
71	'A' Group	42–8051	Petrol tank mounting rubber (top tube)	2
72	'A' Group	65–8206	Knee grip (nearside)	1
	'A' Group	65–8205	Knee grip (offside)	1
73	'A' Group	67–8092	Petrol tap	2
74	'A' Group	24–8504	Petrol tap washer (fibre)	2
75	'A' Group	42–9060	Dual seat front support pin	1
76	'A' Group	2–220	Dual seat front support pin securing bolt	1
77	'A' Group	28–2338	Dual seat front fixing bolt	2
78	'A' Group	2–923	Dual seat front fixing bolt washer (plain)	2
79	'A' Group	35–33	Dual seat front fixing bolt washer (spring)	2
80	'A' Group	42–9058	Dual seat front support bracket	1
81	'A' Group	42–9063	Dual seat support rubber	2
	'A' Group	42–9057	Dual seat support rubber (1955 models)	2
82	'A' Group	2–510	Rear brake rod toggle end screw	1
83	'A' Group	2–443	Rear brake rod toggle end screw nut	1
84	'A' Group	42–7003	Rear brake pedal complete	1

Plate 19—*cont.* PETROL TANK, HANDLEBAR, FRONT MUDGUARD, TOOL BOX AND REAR BRAKE CONTROL —'A' GROUP (SWINGING ARM FRAME)

Plate Ref. Number	Model	Part No.	Description	Number per set
85	'A' Group	2–46	Rear brake pedal fulcrum pin nut	1
86	'A' Group	66–4707	Rear brake pedal fulcrum pin washer (shakeproof)	1
87	'A' Group	42–7012	Rear brake pedal fulcrum pin	1
88	'A' Group	67–4032	Rear brake pedal fulcrum stud	1
89	'A' Group	30–196	Rear brake pedal fulcrum stud washer (plain)	1
90	'A' Group	67–8087	Flexible petrol pipe complete (armoured)	1
	'A' Group	42–8070	Flexible petrol pipe complete (plastic) (1955 models)	1
91	'A' Group	2–525	Rear brake pedal fulcrum stud washer (spring)	1
92	'A' Group	2–46	Rear brake pedal fulcrum stud nut	1
93	'A' Group	42–8075	Petrol tap (1955 models)	2
94	'A' Group	67–8059	Petrol tap washer (plain)	2
95	'A' Group	67–8060	Petrol tap domed nut	2

Plate 20 LEGSHIELDS 'A' GROUP (PLUNGER FRAME)

Plate Ref. Number	Model	Part No.	Description	Number per set
	'A' Group	67–7201	Legshields assembled complete	1
1	'A' Group	66–7353	Legshield support tube clip	8
2	'A' Group	27–8560	Legshield support tube clip washer	8
3	'A' Group	67–7205	Legshield top cross tube adaptor	1
4	'A' Group	67–7204	Legshield top cross tube spacing sleeve	1
5	'A' Group	67–7205	Legshield top cross tube adaptor	1
6	'A' Group	2–46	Cross tube adaptor stud nut	2
7	'A' Group	2–522	Cross tube adaptor stud washer	2
8	'A' Group	67–7203	Legshield top cross tube clamp	1
9	'A' Group	27–5683	Legshield top cross tube adaptor stud	2
10	'A' Group	67–7202	Legshield only	2
11	'A' Group	15–7161	Legshield support tube clip screw	8
12	'A' Group	2–2395	Legshield support tube clip nut	8
13	'A' Group	29–7670	Crankcase and legshield bottom fixing plate stud	2
14	'A' Group	36–382	Crankcase and legshield bottom fixing plate stud washer	4
15	'A' Group	2–49	Crankcase and legshield bottom fixing plate stud nut	4
16	'A' Group	66–7351	Legshield support tube complete	4
17	'A' Group	67–7208	Bottom cross tube fixing complete	2

Plate 20 **LEGSHIELDS—'A' GROUP (PLUNGER FRAME)**

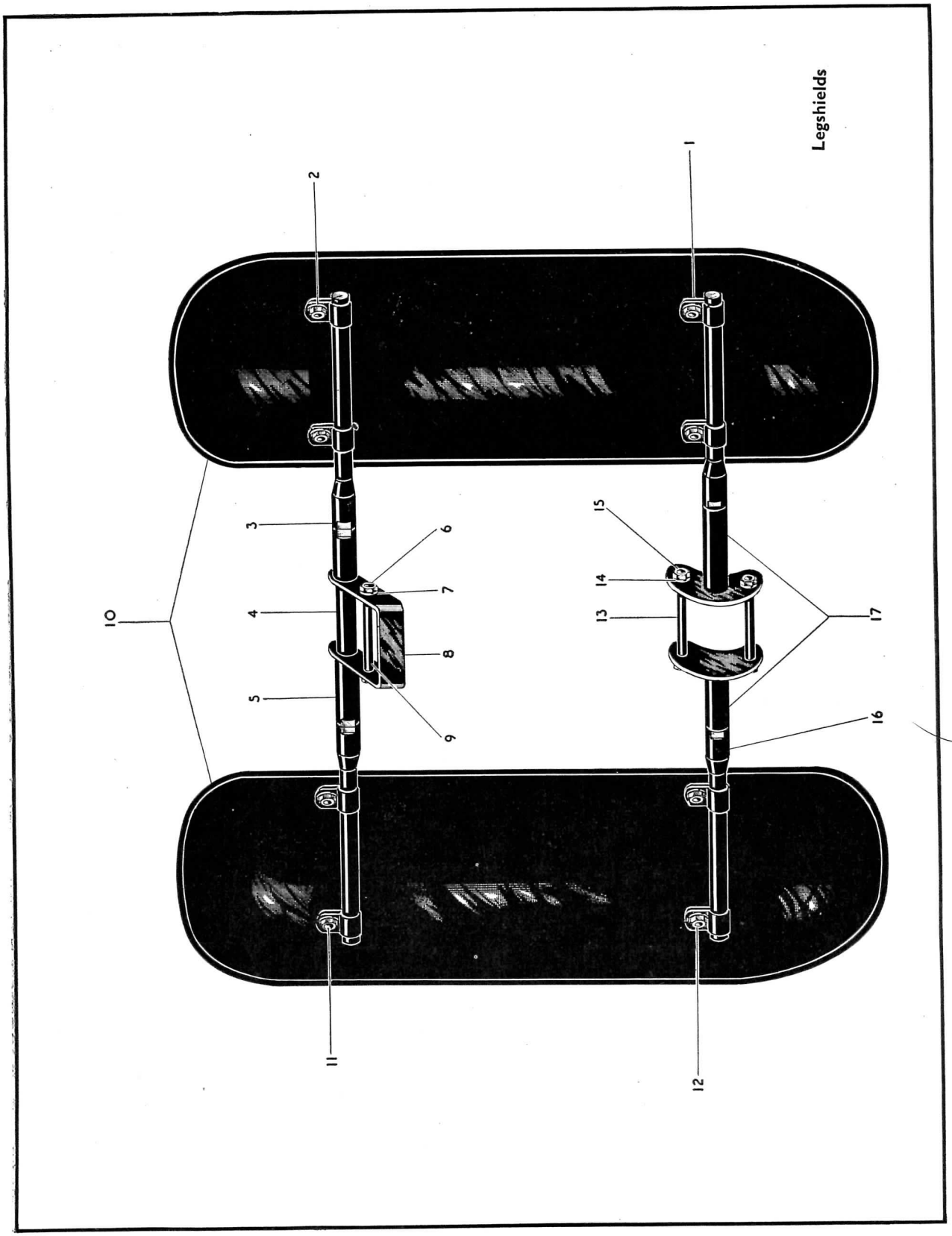

Plate 21

LEGSHIELDS
'A' GROUP (SWINGING ARM FRAME)

Plate Ref. Number	Model	Part No.	Description	Number per set
	'A' Group	42–7205	Legshield assembly	1
1	'A' Group	67–7208	Bottom cross tube fixing complete	2
2	'A' Group	15–7161	Legshield support tube clip screw	8
	'A' Group	27–8560	Legshield support tube clip screw washer (plain)	8
	'A' Group	2–2395	Legshield support tube clip screw nut	8
3	'A' Group	42–7207	Legshield (nearside)	1
4	'A' Group	67–7205	Legshield top cross tube adaptor	2
5	'A' Group	42–4906	Legshield front down tube split clamp	2
6	'A' Group	2–2138	Legshield front down tube split clamp washer (plain)	4
7	'A' Group	42–7210	Legshield top spacing sleeve	1
8	'A' Group	42–7211	Legshield top cross tube adaptor stud	1
9	'A' Group	42–7212	Legshield front down tube clamp eye bolt	2
10	'A' Group	42–7208	Legshield support tube complete (top)	2
11	'A' Group	2–522	Legshield front down tube clamp washer (spring)	4
12	'A' Group	2–46	Legshield front down tube clamp nut	4
13	'A' Group	2–803	Legshield front down tube clamp bolt	2
14	'A' Group	42–7206	Legshield (offside)	1
15	'A' Group	66–7353	Legshield support tube clip	8
16	'A' Group	42–7208	Legshield support tube complete (bottom)	2
17	'A' Group	29–7670	Crankcase and legshield bottom fixing plate stud	2

Plate 22

BUMPER BARS
'A' GROUP (PLUNGER FRAME)

Plate Ref. Number	Model	Part No.	Description	Number per set
	'A' Group	67–4919	Front bumper bar assembly complete with fittings	1
1	'A' Group	3–110	Front bumper bar bolt washer (spring)	1
2	'A' Group	2–1925	Front bumper bar bolt nut	1
3	'A' Group	24–5658	Front bumper bar bolt	1
4	'A' Group	67–4925	Front bumper bar bush	1
5	'A' Group	67–4920	Front bumper bar assembly	1
6	'A' Group	27–6275	Frame, crankcase and exhaust pipe lug stud	1
7	'A' Group	67–4932	Rear bumper bar complete (nearside) (when pillion footrests are fitted)	1
	'A' Group	67–4926	Rear bumber bar complete (offside) (when pillion footrests are fitted)	1
8	'A' Group	67–4928	Rear bumper bar adaptor (top)	2
9	'A' Group	29–6110	Rear bumper bar and pillion footrest bolt (when pillion footrests are fitted)	2
10	'A' Group	2–2138	Rear bumper bar and pillion footrests bolt washer (when pillion footrests are fitted)	2
11	'A' Group	66–7363	Pillion footrest rubber	2
12	'A' Group	29–905	Rear bumper bar adaptor nut (when pillion footrests are fitted)	2
13	'A' Group	24–5914	Rear bumper bar adaptor washer (when pillion footrests are fitted)	2
14	'A' Group	67–4873	Pillion footrest	2
15	'A' Group	67–4875	Pillion footrest adaptor (bottom)	2
16	'A' Group	30–659	Rear bumper bar and pillion footrest washer (large) (when pillion footrests are fitted)	2
17	'A' Group	66–4708	Rear bumper bar and pillion footrest washer (shakeproof) (when pillion footrests are fitted)	2
18	'A' Group	31–7275	Rear bumper bar and pillion footrest bolt (when pillion footrests are fitted)	2
19	'A' Group	3–1271	Rear bumper bar bolt (when pillion footrests not fitted)	2
20	'A' Group	66–4708	Rear bumper bar bolt washer (shakeproof) (when pillion footrests not fitted)	2
21	'A' Group	30–659	Rear bumper bar bolt washer (large) (when pillion footrests not fitted)	2
22	'A' Group	66–4822	Rear bumper bar (offside) (when pillion footrests not fitted)	1
	'A' Group	66–4823	Rear bumper bar (nearside) (when pillion footrests not fitted)	1

Plate 21 LEGSHIELDS—'A' GROUP (SWINGING ARM FRAME)

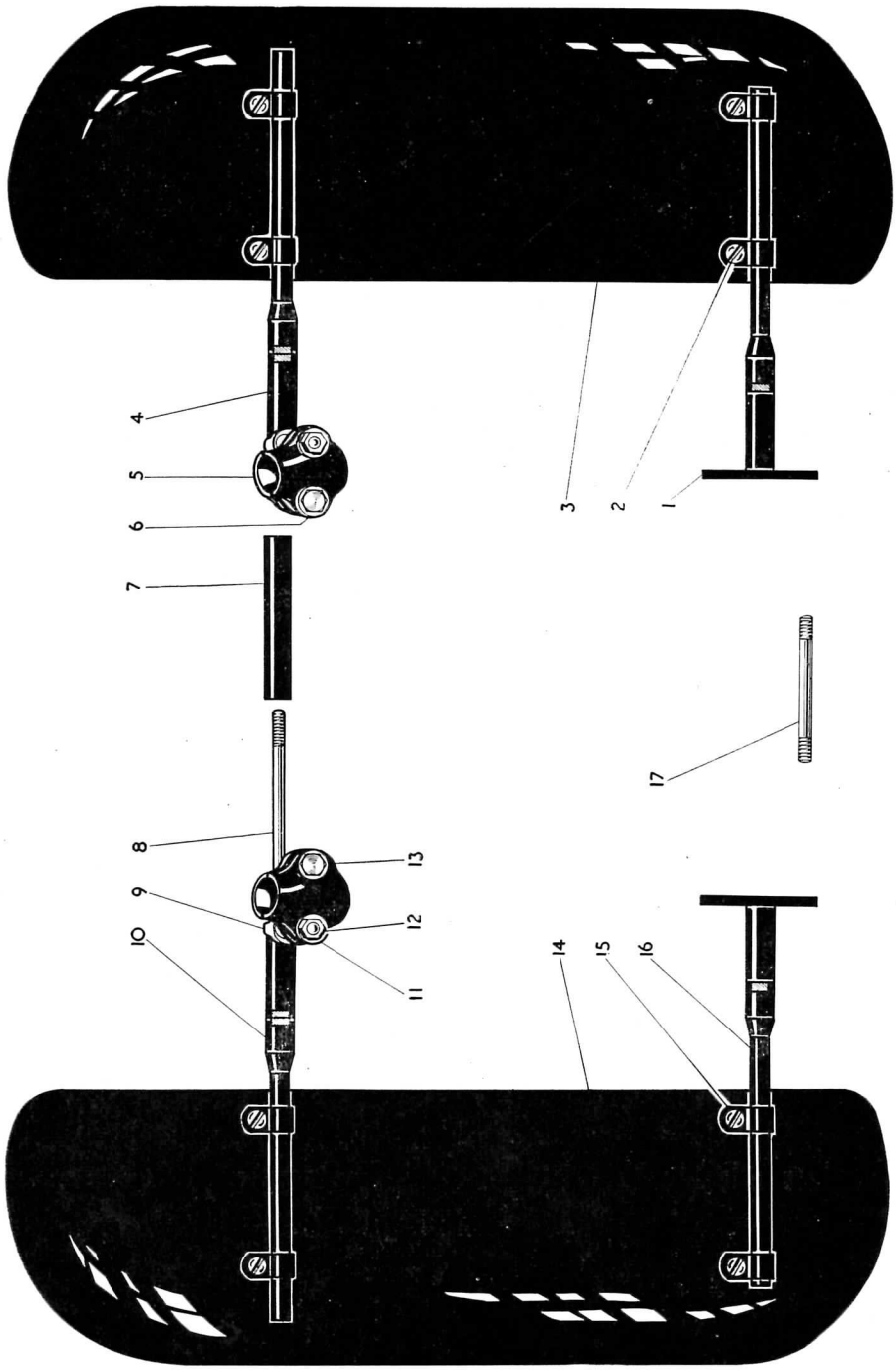

Legshields

Plate 22

FRONT AND REAR BUMPER BARS
'A' GROUP (PLUNGER FRAME)

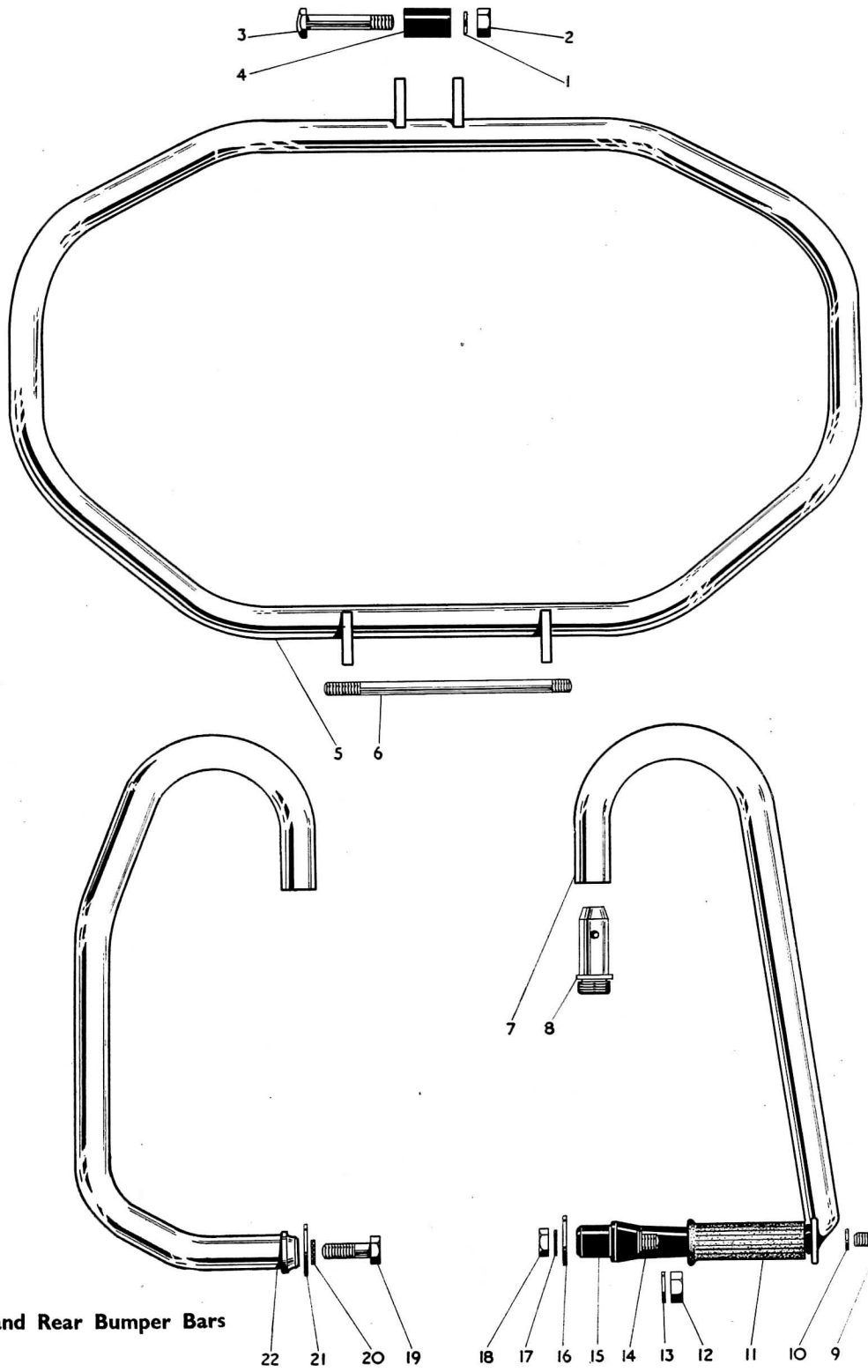

Front and Rear Bumper Bars

Plate 23 FRONT AND REAR BUMPER BARS, CARRIER AND HANDRAIL 'A' GROUP (SWINGING ARM FRAME)

Plate Ref. Number	Model	Part No.	Description	Number per set
	'A' Group	42–4899	Front bumper bar assembled complete with fittings	1
1	'A' Group	2–46	Front bumper bar split clamp bolt nut	2
2	'A' Group	2–2903	Front bumper bar split clamp bolt washer	2
3	'A' Group	2–803	Front bumper bar split clamp bolt	2
4	'A' Group	42–4906	Front bumper bar split clamp	2
5	'A' Group	42–4904	Front bumper bar eye bolt	2
	'A' Group	2–522	Front bumper bar eye bolt washer (spring)	2
	'A' Group	2–46	Front bumper bar eye bolt nut	2
6	'A' Group	2–46	Front bumper bar top fixing bolt nut	1
7	'A' Group	2–522	Front bumper bar top fixing bolt washer (spring)	1
8	'A' Group	42–4905	Front bumper bar eye bolt spacing tube	1
9	'A' Group	65–4185	Front bumper bar fixing bolt (top)	1
10	'A' Group	42–4900	Front bumper bar complete	1
11	'A' Group	42–4907	Front bumper bar engine plate distance collar	2
12	'A' Group	42–4910	Rear bumper bar complete (offside)	1
13	'A' Group	42–4914	Rear bumper bar complete (nearside)	1
14	'A' Group	15–7161	Carrier fixing screw (rear)	2
15	'A' Group	2–525	Carrier fixing screw washer (rear) (plain)	2
16	'A' Group	2–1462	Carrier fixing screw washer (rear) (spring)	2
17	'A' Group	2–2395	Carrier fixing screw nut (rear)	2
18	'A' Group	42–6920	Carrier complete	1
19	'A' Group	27–6037	Carrier fixing screw (front)	2
20	'A' Group	24–6770	Handrail mudguard bolt	2
21	'A' Group	2–923	Handrail mudguard bolt washer (plain)	2
22	'A' Group	42–9075	Dual seat handrail complete	1
23	'A' Group	36–382	Handrail mudguard bolt washer (shakeproof)	2
24	'A' Group	2–49	Handrail mudguard bolt nut	2
25	'A' Group	2–49	Handrail mudguard stay bolt nut	2
26	'A' Group	24–8784	Handrail mudguard stay bolt washer (spring)	2
27	'A' Group	2–923	Handrail mudguard stay bolt washer (plain)	2
28	'A' Group	27–6037	Handrail mudguard stay bolt	2

Plate 24 TOOLS AND SUNDRIES 'A' GROUP (PLUNGER AND SWINGING ARM FRAME)

Plate Ref. Number	Model	Part No.	Description	Number per set
1	'A' Group	28–4265	Grease gun	1
2	'A' Group	29–9251	Magdyno spanner	1
3	'A' Group	1–3051	Double ended spanner	1
4	'A' Group	29–9253	Tommy bar	1
5	'A' Group	67–9114	Push rod assembly tool	1
6	'A' Group	65–9205	Toolbag	1
7	'A' Group	42–9026	Inflator	1
8	'A' Group Plunger	65–9245	Rear hub spindle nut spanner	1
9	'A' Group	65–9246	Carburettor and tappet adjusting spanner	1
10	'A' Group	67–9026	Box spanner	1
11	'A' Group	29–9252	Tyre lever	1
12	'A' Group	67–9023	Cylinder head bolt box spanner	1
13	'A' Group	65–9125	Feeler gauge (.010″)	1
	'A' Group	67–9047	Feeler gauge (.015″)	1
14	'A' Group	65–9240	Valve grinding tool	1
15	'A' Group	67–9028	Double ended spanner	1
16	'A' Group Plunger	66–9132	Sparking plug spanner	1
	'A' Group Swinging Arm	67–9121	Sparking plug spanner	1
17	'A' Group	15–832	Box spanner	1
18	'A' Group Swinging Arm	42–9080	Damper unit adjusting spanner	1
19	'A' Group Swinging Arm	65–9243	Combined spanner	1
20	'A' Group Swinging Arm	42–9031	Petrol tank fixing bolt spanner	1
21	'A' Group Swinging Arm	24–8957	Petrol tank fixing bolt spanner tommy bar	1

Plate 23

FRONT AND REAR BUMPER BARS, CARRIER AND HANDRAIL 'A' GROUP (SWINGING ARM FRAME)

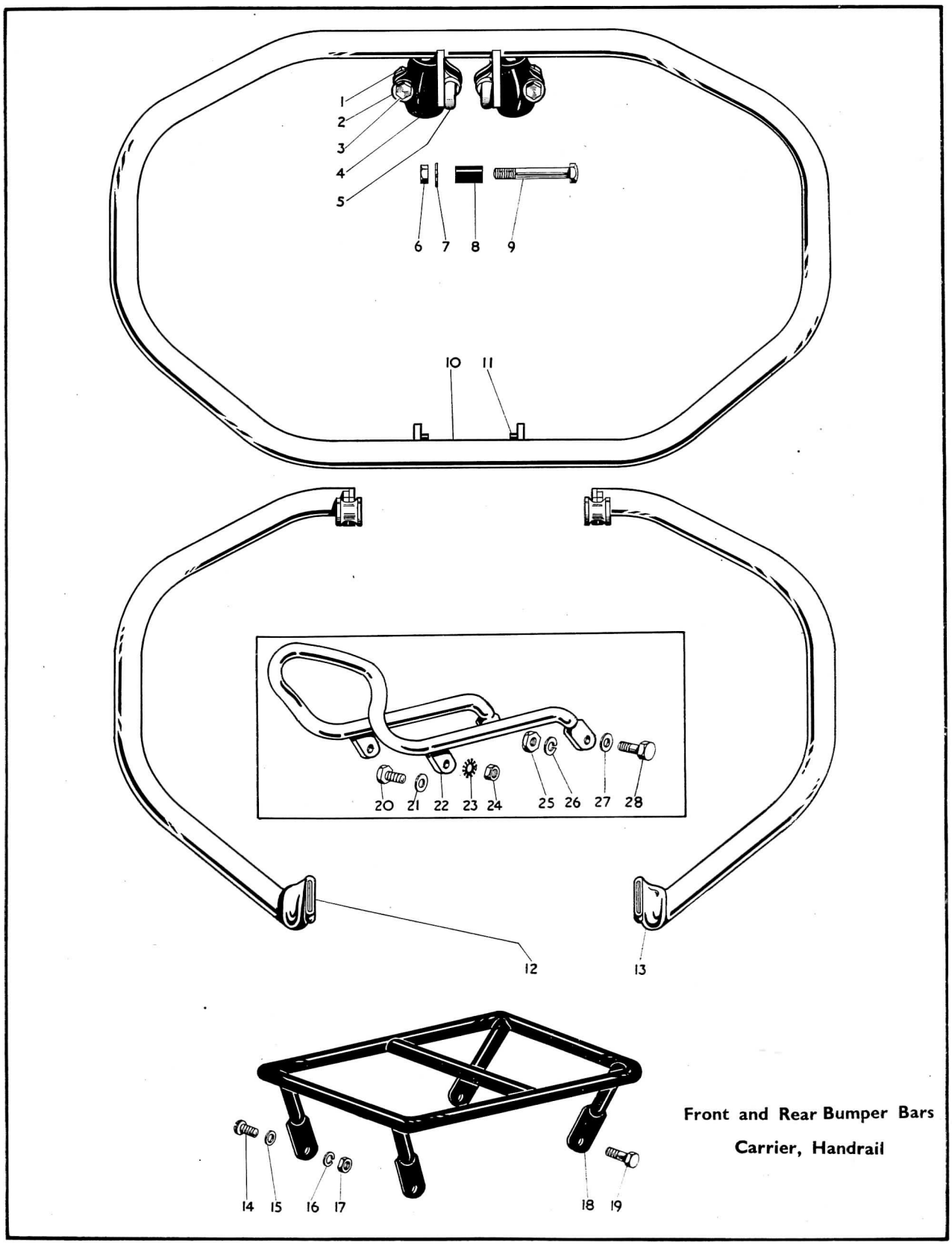

Plate 24

TOOLS AND SUNDRIES
'A' GROUP (PLUNGER AND SWINGING ARM FRAMES)

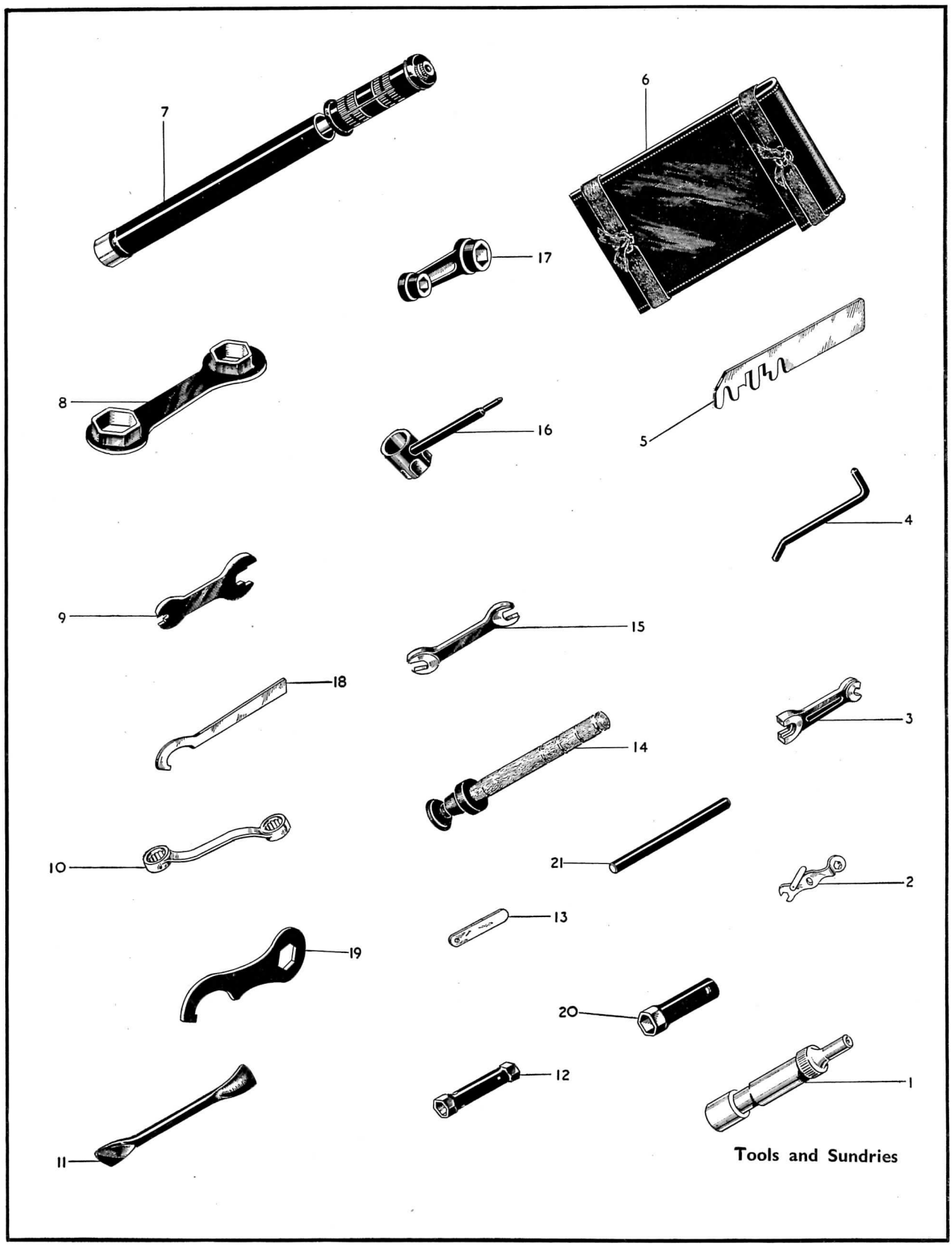

Plate 25

ELECTRICAL EQUIPMENT
'A' GROUP (PLUNGER AND SWINGING ARM FRAMES)

Plate Ref. Number	Model	Part No.	Description	Number per set
1	'A' Group Plunger	67–9068	Electric horn	1
2	'A' Group Swinging Arm	42–9045	Electric horn	1
3	'A' Group Swinging Arm	42–9009	Voltage control cable grommet (toolbox fixing)	1
4	'A' Group Plunger	2–14	Voltage control bolt	2
5	'A' Group Plunger	2–1374	Voltage control bolt washer (plain)	2
6	'A' Group Plunger	24–8784	Voltage control bolt washer (spring)	2
7	'A' Group Plunger	2–2395	Voltage control bolt nut	2
8	'A' Group Plunger	27–8560	Voltage control bolt washer (bottom)	4
9	'A' Group Plunger	15–7383	Voltage control support rubber	2
10	'A' Group Plunger	27–8560	Voltage control bolt washer (top)	2
11	'A' Group Plunger	2–2395	Voltage control bolt nut (top)	2
12	'A' Group Plunger	2–443	Voltage control bolt locknut	2
13	'A' Group Swinging Arm	42–9012	Voltage control toolbox buffer ring (toolbox fixing)	1
14	'A' Group	19–1515	Voltage control	1
15	'A' Group Swinging Arm	2–2395	Voltage control securing bolt nut (toolbox fixing)	2
16	'A' Group Swinging Arm	25–7180	Voltage control securing bolt washer (toolbox fixing)	2
17	'A' Group Swinging Arm	2–1354	Voltage control securing bolt (toolbox fixing)	2
18	'A' Group	19–2012	Horn push	1
19	'A' Group	19–1472	Cut out	1
20	'A' Group	19–2126	Speedometer cable rubber grommet	1
21	'A' Group Plunger	19–657	Cable harness with dipper switch	1
	'A' Group Swinging Arm	19–690	Cable harness with dipper switch	1
22	'A' Group Plunger	67–9063	Speedometer cable	1
	'A' Group Swinging Arm	65–9267	Speedometer cable	1
23	A7 Plunger	19–2112	Speedometer (solo and sidecar) (120 m.p.h.)	1
	A7 Plunger	19–2123	Speedometer (solo and sidecar) (180 k.p.h.)	1
	Star Twin	19–2109	Speedometer (solo) (120 m.p.h.)	1
	Star Twin	19–2121	Speedometer (solo) (180 k.p.h.)	1
	Star Twin & A10 Plunger	19–2112	Speedometer (sidecar) (120 m.p.h.)	1
	Star Twin & A10 Plunger	19–2123	Speedometer (sidecar) (180 k.p.h.)	1
	A10 Plunger	19–2111	Speedometer (solo) (120 m.p.h.)	1
	A10 Plunger	19–2122	Speedometer (solo) (180 k.p.h.)	1
	'A' Group Swinging Arm	19–2111	Speedometer (120 m.p.h.)	1
	'A' Group Swinging Arm	19–2122	Speedometer (180 k.p.h.)	1
24	A7 Plunger & Swinging Arm	19–511/37	Headlamp	1
	Star Twin & Shooting Star	19–512/39	Headlamp	1
	A10 Plunger & Swinging Arm	19–513/24	Headlamp	1
	'A' Group	19–526	Headlamp (1955 models)	1
25	'A' Group	29–9221	Licence holder	1
26	'A' Group	19–649	Ammeter	1
27	A7, A10 Plunger & Swinging Arm	19–1210	Magneto	1
	Star Twin & Shooting Star	19–1203	Magneto	1
28	'A' Group	19–1207	Dynamo	1
29	'A' Group Swinging Arm	2–47	Stop light switch plate screw nut	2
30	'A' Group Swinging Arm	29–3319	Stop light switch plate screw washer (shakeproof)	2
31	'A' Group Swinging Arm	42–9027	Stop lamp switch operating link	1
32	'A' Group Swinging Arm	65–9235	Stop lamp switch operating spring	1
33	'A' Group Swinging Arm	19–1114	Stop lamp switch	1
34	'A' Group Swinging Arm	2–1309	Stop lamp switch screw	2
35	'A' Group	19–1000	Stop lamp	1
36	'A' Group Plunger	28–2338	Stop light switch plate and clip bolt	1
37	'A' Group Plunger	24–8927	Stop light switch plate clip	1
38	'A' Group Plunger	29–9342	Stop light switch plate	1
39	'A' Group Plunger	2–923	Stop light switch plate bolt washer (plain)	1
40	'A' Group Plunger	36–382	Stop light switch plate clip bolt washer (shakeproof)	1
41	'A' Group Plunger	2–49	Stop light switch plate clip bolt nut	1
42	'A' Group Plunger	2–47	Stop light switch plate screw nut	2
43	'A' Group Plunger	29–3319	Stop light switch plate screw washer (shakeproof)	2
44	'A' Group Plunger	2–1309	Stop light switch plate screw	2
45	'A' Group Plunger	65–9231	Stop light operating spring	1
46	'A' Group Plunger	2–1588	Stop light spring clip nut	1
47	'A' Group Plunger	29–3319	Stop light spring clip screw washer (shakeproof)	1
48	'A' Group Plunger	65–9228	Stop light spring clip	1
49	'A' Group Plunger	65–5912	Stop light spring clip screw	1
50	'A' Group Plunger	19–1106	Stop light switch	1
—	'A' Group	19–1552	Battery	1

Plate 25

ELECTRICAL EQUIPMENT
'A' GROUP (PLUNGER AND SWINGING ARM FRAMES)

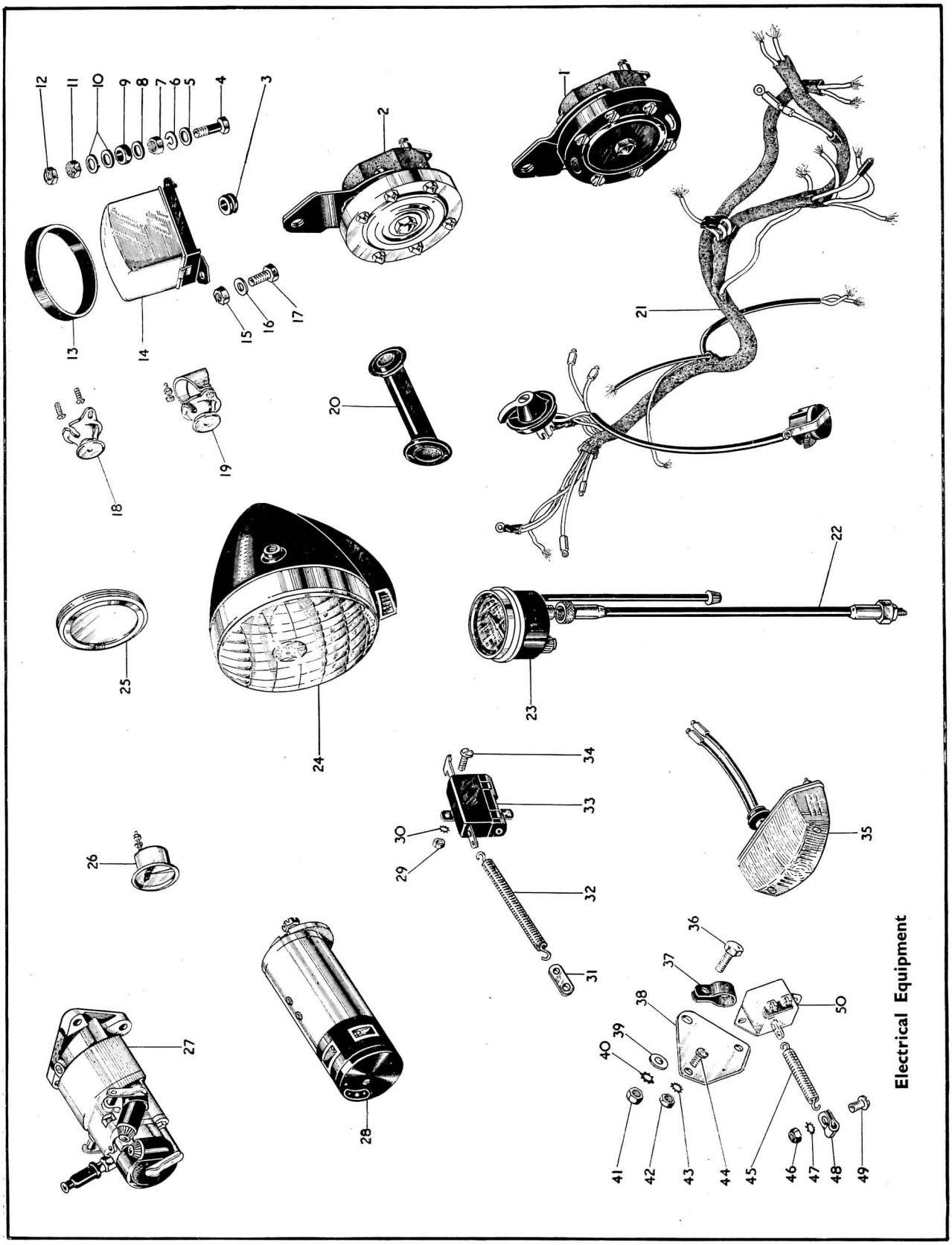

SIDECAR CHASSIS

No. 22 and No. 23.

'A' GROUP (PLUNGER FRAME)

DESCRIPTION	No. 22	No. 23
FRONT STAY.		
Front stay complete	3–1720	3–1720
Front stay cone nut	3–345	3–345
Front stay cone nut washer (spring)	3–108	3–108
Front connecting lug	3–1373	3–1748
Front connecting lug bolt	3–1372	3–1372
Front connecting lug bolt split pin	35–713	35–713
Front connecting lug bolt nut	3–953	3–953
Front connecting lug stud nut	—	2–46(2)
Front connecting lug bolt packing washer (plain)	24–5914	24–5914
Front connecting lug stud washer (plain)	—	2–130(2)
Front connecting lug clip bolt	3–1271	3–1271
Front connecting lug clip bolt washer (spring)	3–110	3–111
Front stay cone nut washer (plain)	66–5524(2)	—
FRONT SUPPORT TUBE.		
Front support tube complete with bolts and nuts	3–1719	3–1719
Front support tube	3–1716	3–1716
Front bottom connection	3–1259	3–1259
Front bottom connection bolt	3–1271	3–1271
Front bottom connection bolt nut	2–1925	2–1925
Front support tube bolt (motor cycle end)	3–619	3–619
Front bottom tube bolt nut (motor cycle end)	2–46	2–46
SADDLE PILLAR.		
Saddle pillar adjusting tube complete	3–1724	3–1724
Saddle pillar tube complete	3–1725	3–1725
Saddle pillar telescopic tube complete	3–1603	3–1603
Saddle pillar telescopic tube lug	3–1258	3–1258
Saddle pillar tube lug bolt	3–1271	3–1271
Saddle pillar tube lug bolt nut	2–1925	2–1925
Saddle pillar telescopic tube bottom lug	3–1252	3–1252
Saddle pillar telescopic tube bottom lug bolt	3–1289	3–1289
Saddle pillar telescopic tube bottom lug bolt nut	2–1925	2–1925
Saddle pillar telescopic tube bottom washer (spherical)	3–1290(2)	3–1290(2)
Saddle pillar telescopic tube bottom lug bolt washer (spring)	15–716	15–716
Saddle pillar tube lug bolt	3–1393	3–1393
Saddle pillar connecting bolt nut	3–1137	3–1137
Saddle pillar connecting bolt washer (spring)	3–107	3–107
Saddle pillar tube lug bolt	3–619	3–619
Saddle pillar tube lug bolt nut	2–46	2–46
Saddle pillar tube lug bolt washer (spring)	3–111	3–111
INSIDE TIE.		
Inside tie complete	3–9263	3–9263
Tube end spindle washer (plain)	24–5914	24–5914
Tube end spindle nut	3–953	3–953
Tube end spindle split pin	35–713	35–713
MAIN FRAME.		
Axle tube complete	3–1709	3–1709
Main rear connection	3–1700	3–1700
Main rear connection washer (spherical)	3–663	3–663
Main rear washer (double spring)	3–664	3–664
Main rear connection nut	2–1946	2–1946
Main rear connection grease nipple	28–2080	28–2080
Main rear connection split pin	35–722	35–722
Wheel bracket	3–1701	3–1701

SIDECAR CHASSIS—*continued*

No. 22 and No. 23.

DESCRIPTION	No. 22	No. 23
OUTSIDE TIE.		
Outside tie complete	3–9264	3–9264
Tube end spindle washer (plain)	24–5914	24–5914
Tube end spindle nut	3–953	3–953
Tube end spindle split pin	35–713	35–713
FRONT SPRING (TWIN)		
Front spring	3–861(2)	3–861(2)
Front spring cup	3–839(2)	3–839(2)
Front spring bracket	3–603(2)	3–1021(2)
Front spring bracket bolt	30–1215(4)	30–1215(4)
Front spring bracket bolt washer (spring)	35–33(4)	35–33(4)
Front spring clamp plate	3–641(2)	3–641(2)
Front spring connecting bolt nut	2–46(2)	2–46(2)
Front spring bearer bar	3–1369	3–1750
Front spring connecting bolt washer (spring)	3–111(2)	3–111(2)
Front spring (inner)	—	3–1080(2)
Front spring connecting bolt	2–803(2)	2–803(2)
REAR SPRING		
Rear spring complete with bush	3–1746(2)	3–1746(2)
Rear spring shackle complete with bush	3–1704(2)	3–1704(2)
Rear spring shackle bolt	3–1383(2)	3–1383(2)
Rear spring shackle bolt nut	15–5753(2)	15–5753(2)
Rear spring shackle bolt washer (spring)	3–107(2)	3–107(2)
Rear spring shackle grease nipple	28–2080(2)	28–2080(2)
Rear bearer bar	3–1703	3–1703
Rear bearer bar nut	3–1509(2)	3–1509(2)
Rear bearer bar split pin	35–708(2)	35–708(2)
Rear bearer bar washer (plain)	2–1945(2)	2–1945(2)
Rear bearer bar thrust washer	24–875(2)	24–875(2)
Rear bearer bar connecting bolt (for No. 47 sidecar body only)	65–4185(2)	65–4185(2)
Rear bearer bar connecting bolt nut	2–46(2)	2–46(2)
Rear bearer bar connecting bolt washer (spring)	3–111(2)	3–111(2)
Rear bearer bar connecting bolt clamp washer (plain)	30–650(2)	30–650(2)
Rear bearer bar connecting bolt (for No. 48 commercial box body)	3–1712(2)	3–1712(2)
Rear spring plate	3–1714(4)	3–1714(4)
Rear spring plate clamp stud	3–1715(8)	3–1715(8)
Rear spring plate clamp stud nut	2–49(8)	2–49(8)
Rear spring plate clamp stud washer (spring)	35–33(8)	35–33(8)
SIDECAR STAND		
Sidecar stand	3–1379	3–1379
Sidecar stand bolt	2–803	2–803
Sidecar stand bolt nut	2–1813	2–1813
Sidecar stand bolt washer (spring)	2–995	2–995

SIDECAR CHASSIS—'A' GROUP (PLUNGER FRAME)

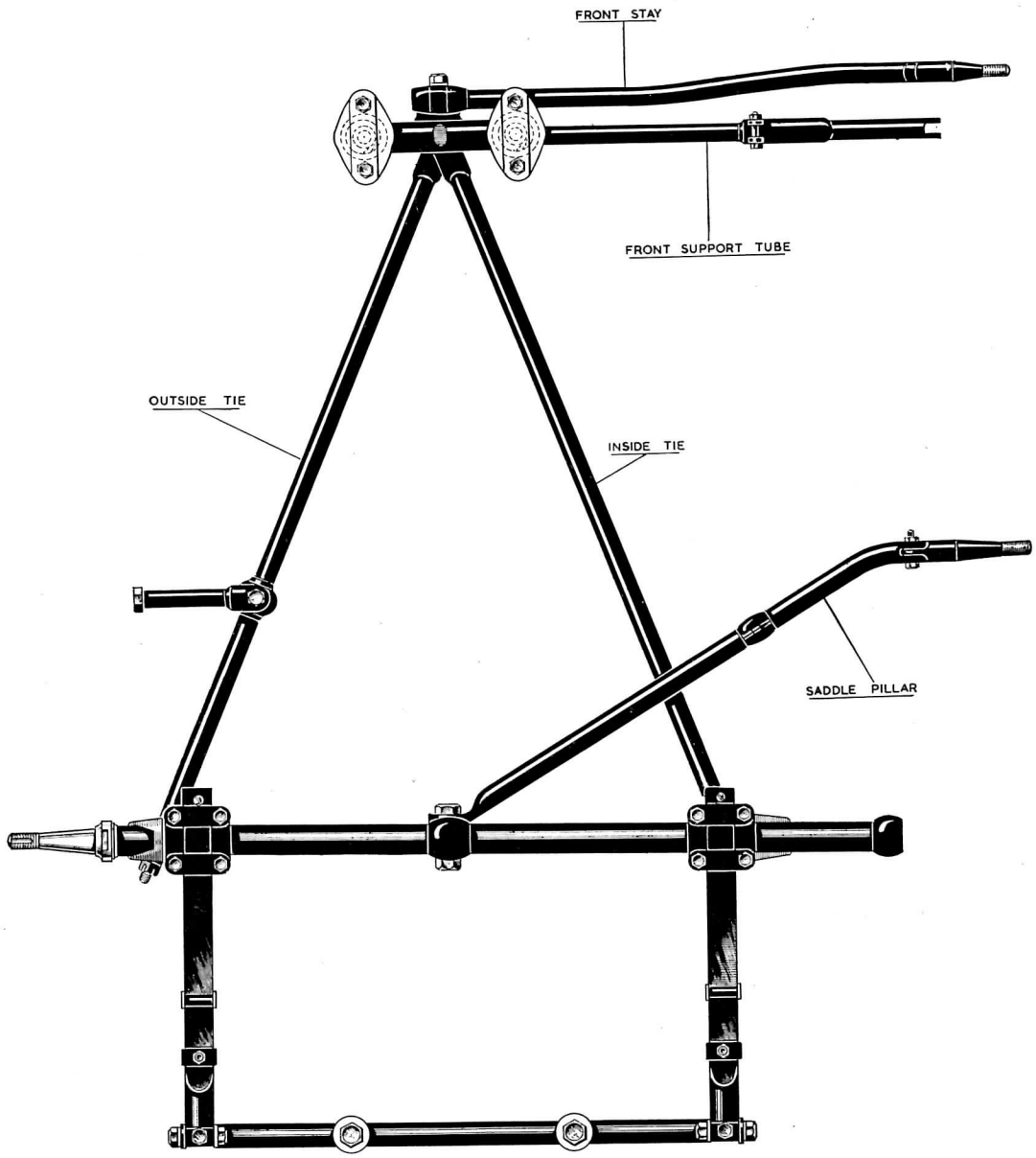

B.S.A SIDECAR CHASSIS No. 22 & 23.

SIDECAR CHASSIS—*continued*

No. 22 and No. 23

DESCRIPTION	No. 22	No. 23
WHEEL AND HUB		
Wheel complete (less tyre, spindle and bearings)	3–9380	3–9380
Wheel rim (WM 3–19)	3–9381	3–9381
Wheel spoke	27–7010(40)	27–7010(40)
Wheel spoke nipples	27–6810(40)	27–6810(40)
Hub shell complete with cups	3–9077	3–9077
Hub shell grease nipple	28–2080	28–2080
Hub ball bearings	¼″ (31)	¼″ (31)
Hub spindle	3–1702	3–1702
Wheel spindle castle nut	3–1816	3–1816
Hub cup (large)	3–36	3–36
Hub cup (small)	3–37	3–37
Hub spindle cone (fixed)	3–1241	3–1241
Hub spindle cone (adjusting)	3–34	3–34
Hub spindle cone washer (plain)	3–103	3–103
Hub spindle cone castle nut	3–62	3–62
Hub spindle cone castle nut split pin	35–705	35–705
Hub spindle bracket washer	27–8039	27–8039
Hub shell cap	3–1685	3–1685
MUDGUARD		
Mudguard	3–1730	3–1730
Mudguard stays complete	3–1731	3–1731
Mudguard stay support tube complete	3–1741	3–1741
Support tube lug bolt	3–12(2)	3–12(2)
Support tube lug bolt nut	2–49(2)	2–49(2)
Support tube lug bolt washer (spring)	35–33(2)	35–33(2)
Mudguard upright stay screw	1–5945(2)	1–5945(2)
Mudguard upright stay nut	2–2395(2)	2–2395(2)
Mudguard upright stay screw washer (plain)	27–8560(2)	27–8560(2)
Mudguard upright stay screw washer (spring)	2–1462(2)	2–1462(2)
Mudguard upright stay bolt	28–2338	28–2338
Mudguard upright stay bolt nut	2–49	2–49
Mudguard upright stay bolt washer (plain)	2–2899	2–2899
Mudguard upright stay bolt washer (spring)	24–8784	24–8784
Mudguard rear stay bolt	28–2338	28–2338
Mudguard rear stay bolt nut	2–49	2–49
Mudguard rear stay bolt washer (plain)	2–2899	2–2899
Mudguard rear stay bolt washer (spring)	24–8784	24–8784
Mudguard stay fixing packing washer	3–101(2)	3–101(2)
Front and rear stay bolt	1–5945(4)	1–5945(4)
Front and rear stay bolt nut	2–2395(4)	2–2395(4)
Front and rear stay bolt washer (plain)	27–8560(4)	27–8560(4)
Front and rear stay bolt washer (spring)	2–1462(4)	2–1462(4)
Mudguard support tube bolt	31–7275	31–7275
Mudguard support tube bolt nut	27–6974	27–6974
Mudguard support bolt distance nut	24–5860	24–5860
Mudguard support lug and spindle nut complete	3–1795	3–1795
SUNDRIES		
Sidecar lamp (Lucas ref.)	19–1109	19–1109
Sidecar lamp packing washer	31–4070	31–4070

Figures in brackets denote number per set

NUMERICAL INDEX—'A' GROUP

Part No.	Page	Ref. No.	Plate	Price £ s. d.
1-1796	32	15	9	4
1-3051	60	3	24	1 9
1-4606	16	97	2	1
1-5069	44	84	15	2
1-5069	44	93	15	2
2-14	49	28	18	4
2-14	63	4	25	4
2-46	25	11	6	4
2-46	25	23	6	4
2-46	27	41	6	4
2-46	27	51	6	4
2-46	27	52	6	4
2-46	28	16	7	4
2-46	28	3	8	4
2-46	28	10	8	4
2-46	28	12	8	4
2-46	28	23	8	4
2-46	28	31	8	4
2-46	30	41	8	4
2-46	30	54A	8	4
2-46	30	80	8	4
2-46	32	35	9	4
2-46	45	21	16	4
2-46	47	40	16	4
2-46	55	85	19	4
2-46	55	92	19	4
2-46	55	6	20	4
2-46	57	12	21	4
2-46	60	1	23	4
2-46	60	5	23	4
2-46	60	6	23	4
2-47	63	29	25	2
2-47	63	42	25	2
2-49	10	38	1	4
2-49	13	108	1	4
2-49	16	98	2	4
2-49	16	98	2	4
2-49	19	97	3	4
2-49	22	73	4	4
2-49	23	21	5	4
2-49	27	35	6	4
2-49	27	46	6	4
2-49	30	40	8	4
2-49	30	71	8	4
2-49	34	29	10	4
2-49	36	19	11	4
2-49	40	22	13	4
2-49	44	32	15	4
2-49	44	36	15	4
2-49	44	57	15	4
2-49	44	78	15	4
2-49	47	56	16	4
2-49	47	8	17	4
2-49	49	5	18	4
2-49	49	7	18	4
2-49	49	31	18	4
2-49	51	52	18	4
2-49	51	69	18	4
2-49	51	75	18	4
2-49	51	89	18	4
2-49	51	92	18	4
2-49	52	107	18	4
2-49	52	10	19	4
2-49	52	13	19	4
2-49	52	20	19	4
2-49	54	66	19	4
2-49	55	15	20	4
2-49	60	24	23	4
2-49	60	25	23	4
2-49	63	41	25	4
2-51	15	57	2	2
2-51	15	81	2	2
2-79	47	9	17	4
2-79	54	55	19	4

Part No.	Page	Ref. No.	Plate	Price £ s. d.
2-84	44	41	15	6
2-100	44	42	15	1
2-129	12	60	1	6
2-129	47	60	16	6
2-130	40	6	14	2
2-204	44	86	15	3
2-204	45	103	15	3
2-220	34	30	10	3
2-220	44	64	15	3
2-220	51	86	18	3
2-220	54	76	19	3
2-292	34	48	10	Doz. 6
2-353	49	9	18	Doz. 3 6
2-433	20	10	4	10
2-440	25	22	6	4
2-440	27	59	6	4
2-440	27	64	6	4
2-440	36	28	11	4
2-440	36	1	12	4
2-440	40	35	13	4
2-440	40	1	14	4
2-443	23	17	5	2
2-443	40	32	13	2
2-443	49	22	17	2
2-443	54	83	19	2
2-443	63	12	25	2
2-449	15	43	2	4
2-449	44	67	15	4
2-449	51	83	18	4
2-498	22	59	4	2
2-498	47	34	16	2
2-510	40	34	13	4
2-510	49	21	17	4
2-510	54	82	19	4
2-522	28	2	8	Doz. 6
2-522	28	9	8	Doz. 6
2-522	28	11	8	Doz. 6
2-522	28	30	8	Doz. 6
2-522	30	42	8	Doz. 6
2-522	30	54	8	Doz. 6
2-522	30	79	8	Doz. 6
2-522	32	16	9	Doz. 6
2-522	44	68	15	Doz. 6
2-522	51	84	18	Doz. 6
2-522	55	7	20	Doz. 6
2-522	57	11	21	Doz. 6
2-522	60	5	23	Doz. 6
2-522	60	7	23	Doz. 6
2-525	17	37	3	Doz. 6
2-525	20	127	3	Doz. 6
2-525	22	25	4	Doz. 6
2-525	22	33	4	Doz. 6
2-525	51	58	18	Doz. 6
2-525	51	58	18	Doz. 6
2-525	55	91	19	Doz. 6
2-525	60	15	23	Doz. 6
2-537	51	61	18	1
2-537	51	68	18	1
2-537	51	74	18	1
2-803	51	85	18	6
2-803	57	13	21	6
2-803	60	3	23	6
2-833	15	21	2	4
2-923	13	124	1	Doz. 6
2-923	16	123	2	Doz. 6
2-923	20	115	3	Doz. 6
2-923	23	105	4	Doz. 6
2-923	25	17	6	Doz. 6
2-923	27	36	6	Doz. 6
2-923	30	56	8	Doz. 6
2-923	30	72	8	Doz. 6
2-923	34	27	10	Doz. 6
2-923	44	45	15	Doz. 6
2-923	44	53	15	Doz. 6

Part No.	Page	Ref. No.	Plate	Price £ s. d.
2–923	44	85	15	Doz. 6
2–923	44	92	15	Doz. 6
2–923	47	53	16	Doz. 6
2–923	47	59	16	Doz. 6
2–923	47	7	17	Doz. 6
2–923	49	3	18	Doz. 6
2–923	49	20	18	Doz. 6
2–923	49	21	18	Doz. 6
2–923	51	81	18	Doz. 6
2–923	51	96	18	Doz. 6
2–923	52	115	18	Doz. 6
2–923	52	16	19	Doz. 6
2–923	52	22	19	Doz. 6
2–923	54	68	19	Doz. 6
2–923	54	78	19	Doz. 6
2–923	60	21	23	Doz. 6
2–923	60	27	23	Doz. 6
2–923	63	39	25	Doz. 6
2–1027	44	80	15	2
2–1096	28	26	8	Doz. 4
2–1309	34	49	10	2
2–1309	63	34	25	2
2–1309	63	44	25	2
2–1354	44	37	15	4
2–1354	44	61	15	4
2–1354	54	62	19	4
2–1354	63	17	25	4
2–1374	63	5	25	2
2–1462	23	16	5	Doz. 6
2–1462	25	30	6	Doz. 6
2–1462	30	52	8	Doz. 6
2–1462	40	33	13	Doz. 6
2–1462	42	15	15	Doz. 6
2–1462	42	16	15	Doz. 6
2–1462	44	73	15	Doz. 6
2–1462	44	77	15	Doz. 6
2–1462	45	101	15	Doz. 6
2–1462	49	16	17	Doz. 6
2–1462	49	14	18	Doz. 6
2–1462	49	29	18	Doz. 6
2–1462	49	35	18	Doz. 6
2–1462	49	37	18	Doz. 6
2–1462	51	88	18	Doz. 6
2–1462	52	100	18	Doz. 6
2–1462	52	100	18	Doz. 6
2–1462	60	16	23	Doz. 6
2–1588	63	46	25	1
2–1616	30	46	8	2
2–1616	42	13	15	2
2–1616	42	21	15	2
2–1616	49	17	18	2
2–1616	49	26	18	2
2–1733	32	18	9	2
2–1733	32	30	9	2
2–1925	28	6	8	6
2–1925	30	43	8	6
2–1925	57	2	22	6
2–1934	42	11	15	4
2–1934	49	23	18	4
2–1945	27	33	6	2
2–1945	27	81	6	2
2–1945	28	4	8	2
2–1945	30	86	8	2
2–1945	32	6	9	2
2–1945	54	37	19	2
2–1946	27	42	6	1 0
2–1967	12	1	1	Doz. 2
2–1967	28	5	8	Doz. 2
2–1967	30	44	8	Doz. 2
2–1967	32	7	9	Doz. 2
2–2138	57	6	21	2
2–2138	57	10	22	2
2–2395	15	12	2	2
2–2395	23	4	5	2
2–2395	25	31	6	2
2–2395	27	69	6	2
2–2395	30	53	8	2
2–2395	34	50	10	2
2–2395	42	14	15	2
2–2395	42	17	15	2
2–2395	44	76	15	2
2–2395	45	100	15	2
2–2395	45	108	15	2
2–2395	49	17	17	2
2–2395	49	25	17	2
2–2395	49	15	18	2
2–2395	49	30	18	2
2–2395	49	34	18	2
2–2395	49	36	18	2
2–2395	52	99	18	2
2–2395	52	99	18	2
2–2395	52	111	18	2
2–2395	52	4	19	2
2–2395	55	12	20	2
2–2395	57	2	21	2
2–2395	60	17	23	2
2–2395	63	7	25	2
2–2395	63	11	25	2
2–2395	63	15	25	2
2–2527	36	25	11	6
2–2527	40	30	13	6
2–2578	20	131	3	4
2–2578	23	114	4	4
2–2579	20	118	3	6
2–2579	23	111	4	6
2–2580	49	12	18	2
2–2580	49	27	18	2
2–2903	16	111	2	Doz. 6
2–2903	27	53	6	Doz. 6
2–2903	34	46	10	Doz. 6
2–2903	60	2	23	Doz. 6
2–3525	15	52	2	1
2–3718	19	93	3	4
2–3718	22	87	4	4
2–4553	19	69	3	Doz. 6
2–4553	20	111	3	Doz. 6
2–4553	22	62	4	Doz. 6
2–4553	23	99	4	Doz. 6
2–6537	30	67A	8	2
2–6537	44	72	15	2
2–6537	52	110	18	2
3–110	27	60	6	Doz. 6
3–110	57	1	22	Doz. 6
3–720	17	38	3	Doz. 2 6
3–720	22	29	4	Doz. 2 6
3–720	38	40	12	Doz. 2 6
3–720	42	41	14	Doz. 2 6
3–1271	57	19	22	1 0
3–1399	28	9	7	8
3–1399	32	29	9	8
3–1718	27	63	6	2 4
15–40	12	84	1	4
15–203	10	14	1	Doz. 6
15–203	51	64	18	Doz. 6
15–431	36	30A	11	2
15–431	36	3	12	2
15–431	40	37	13	2
15–431	40	3	14	2
15–447	42	9	15	6
15–447	44	63	15	6
15–447	52	108	18	6
15–447	54	64	19	6
15–518	27	55	6	6
15–541	27	34	6	6
15–541	36	24	11	6
15–541	40	27	13	6

Part No.	Page	Ref. No.	Plate	Price £ s. d.
15-541	47	48	16	6
15-716	36	23	11	2
15-716	40	26	13	2
15-716	47	49	16	2
15-832	60	17	24	3 6
15-1312	28	17	7	6
15-1312	49	26	17	6
15-1312	52	3	19	6
15-1355	13	102	1	6
15-1355	13	115	1	6
15-1485	17	36	3	6
15-1485	22	34	4	6
15-1555	13	4	2	6 0
15-1560	13	5	2	7 6
15-1566	13	5	2	7 6
15-4207	44	69	15	4
15-4240	23	108	4	1
15-5155	12	78	1	1
15-5155	20	132	3	1
15-5155	23	113	4	1
15-5155	34	12	10	1
15-5290	36	11	11	1 0
15-5290	38	19	12	1 0
15-5290	38	8	13	1 0
15-5290	40	23	14	1 0
15-5664	30	47	8	1 0
15-5753	32	38	9	8
15-6524	30	57	8	4
15-7161	25	28	6	4
15-7161	42	27	15	4
15-7161	44	31	15	4
15-7161	49	40	18	4
15-7161	51	47	18	4
15-7161	55	11	20	4
15-7161	57	2	21	4
15-7161	60	14	23	4
15-7354	42	23	15	4
15-7354	49	22	18	4
15-7354	51	51	18	4
15-7354	52	23	19	4
15-7383	63	9	25	1
15-7563	23	19	5	4
19-511/37	63	24	25	P.O.A.
19-512/39	63	24	25	P.O.A.
19-513/24	63	24	25	P.O.A.
19-526	63	24	25	P.O.A.
19-649	63	26	25	P.O.A.
19-657	63	21	25	P.O.A.
19-690	63	21	25	P.O.A.
19-1000	63	35	25	P.O.A.
19-1106	63	50	25	P.O.A.
19-1114	63	33	25	P.O.A.
19-1203	63	27	25	P.O.A.
19-1207	63	28	25	P.O.A.
19-1210	63	27	25	P.O.A.
19-1429	15	36	2	P.O.A.
19-1472	63	19	25	P.O.A.
19-1473	15	40	2	P.O.A.
19-1515	63	14	25	P.O.A.
19-1552	63	—	25	P.O.A.
19-2012	63	18	25	P.O.A.
19-2109	63	23	25	P.O.A.
19-2111	63	23	25	P.O.A.
19-2111	63	23	25	P.O.A.
19-2112	63	23	25	P.O.A.
19-2112	63	23	25	P.O.A.
19-2121	63	23	25	P.O.A.
19-2122	63	23	25	P.O.A.
19-2122	63	23	25	P.O.A.
19-2123	63	23	25	P.O.A.
19-2123	63	25	25	P.O.A.
19-2126	63	20	25	P.O.A.
21-431	27	67	6	6
21-431	40	5	14	6

Part No.	Page	Ref. No.	Plate	Price £ s. d.
21-2880	42	2	15	6
21-5102	10	42	1	2
21-5102	45	111	15	2
21-5102	52	119	18	2
21-5104	17	149	2	4
21-5842	17	7	3	4
21-6187	10	45	1	4
24-195	16	110	2	1 0
24-563	10	25	1	4
24-563	32	36	9	4
24-868	22	41	4	2
24-978	10	10	1	2
24-4065	20	3	4	P.O.A.
24-4065	19	66	3	P.O.A.
24-4217	19	100	3	P.O.A.
24-4217	20	14	4	P.O.A.
24-4263	17	27	3	2
24-4263	22	55	4	2
24-5160	12	91	1	4
24-5160	13	9	2	4
24-5160	25	16	6	4
24-5160	34	31	10	4
24-5658	57	3	22	1 0
24-5860	32	8	9	4
24-5860	38	44	12	4
24-5914	32	40	9	2
24-5914	57	13	22	2
24-6035	34	21	10	2
24-6040	10	36	1	4
24-6040	13	112	1	4
24-6040	13	120	1	4
24-6040	27	75	6	4
24-6040	30	78	8	4
24-6770	30	55	8	4
24-6770	44	52	15	4
24-6770	60	20	23	4
24-7000	16	83	2	4
24-7000	22	52	4	4
24-7000	42	48	14	4
24-7148	52	102	18	4
24-7178	20	120	3	2
24-7178	23	112	4	2
24-7178	49	11	18	6
24-7343	30	66	8	6
24-7343	45	107	15	6
24-7343	52	113	18	6
24-8045	38	43	12	4
24-8328	51	59	18	4
24-8328	51	59	18	4
24-8504	47	43	16	2
24-8504	54	74	19	2
24-8784	10	16	1	1
24-8784	13	107	1	1
24-8784	13	113	1	1
24-8784	13	119	1	1
24-8784	13	122	1	1
24-8784	19	98	3	1
24-8784	22	74	4	1
24-8784	25	40	5	1
24-8784	30	33	8	1
24-8784	42	1	15	1
24-8784	42	12	15	1
24-8784	42	22	15	1
24-8784	44	33	15	1
24-8784	44	48	15	1
24-8784	47	36	16	1
24-8784	49	6	18	1
24-8784	49	8	18	1
24-8784	49	10	18	1
24-8784	49	18	18	1
24-8784	49	25	18	1
24-8784	51	53	18	1
24-8784	51	90	18	1
24-8784	51	93	18	1

Part No.	Page	Ref. No.	Plate	Price £ s. d.
24–8784	51	95	18	1
24–8784	52	106	18	1
24–8784	52	8	19	1
24–8784	52	21	19	1
24–8784	60	26	23	1
24–8784	63	6	25	1
24–8927	44	71	15	6
24–8927	63	37	25	6
24–8930	23	12	5	P.O.A.
24–8957	60	21	24	6
24–9569	54	28	19	6
24–9570	52	26	19	6
24–9571	54	27	19	2
24–9572	54	32	19	6
24–9573	54	29	19	3
25–5241	34	53	10	6
25–5247	34	24	10	6
25–6014	36	27	11	2
25–6014	40	28	13	2
25–7151	16	94	2	2
25–7180	63	16	25	2
26–650	17	24	3	Doz. 2 6
27–410	52	109	18	2
27–1386	16	93	2	4
27–1589	15	27	2	2
27–4258	22	60	4	4
27–4401	20	113	3	4
27–4401	23	102	4	4
27–5135	34	14	10	8
27–5152	34	52	10	6
27–5674	52	14	19	1 0
27–5676	45	5	16	2
27–5683	28	8	8	8
27–5683	55	9	20	8
27–5690	28	29	8	1 0
27–5690	47	4	17	1 0
27–5705	30	48	8	1 0
27–6037	47	52	16	6
27–6037	60	19	23	6
27–6037	60	28	23	6
27–6275	57	6	22	1 0
27–6275	25	14	6	1 0
27–6276	30	35	8	2 0
27–6810	36	5	11	1
27–6810	38	2	13	1
27–6810	40	20	14	1
27–6813	38	32	12	1
27–8560	44	28	15	1
27–8560	44	30	15	1
27–8560	44	70	15	1
27–8560	44	82	15	1
27–8560	45	102	15	1
27–8560	49	38	18	1
27–8560	51	46	18	1
27–8560	51	87	18	1
27–8560	55	2	20	1
27–8560	57	2	21	1
27–8560	63	8	25	1
27–8560	63	10	25	1
28–243	19	70	3	4
28–243	20	112	3	4
28–243	22	63	4	4
28–243	23	100	4	4
28–2080	20	125	3	3
28–2080	23	104	4	3
28–2080	25	5	6	3
28–2080	25	17A	6	3
28–2080	25	26	6	3
28–2080	28	10	7	3
28–2080	28	18	8	3
28–2080	30	62	8	3
28–2080	32	2	9	3
28–2080	36	31	11	3
28–2080	40	39	13	3

Part No.	Page	Ref. No.	Plate	Price £ s. d.
28–2338	30	82	8	4
28–2338	34	26	10	4
28–2338	42	20	15	4
28–2338	51	48	18	4
28–2338	51	48	18	4
28–2338	51	80	18	4
28–2338	51	97	18	4
28–2338	54	77	19	4
28–2338	63	36	25	4
28–4265	60	1	24	P.O.A.
29–410	10	1	1	Pair 1 0
29–541	10	43	1	Doz. 6
29–541	15	13	2	Doz. 6
29–541	15	58	2	Doz. 6
29–541	15	80	2	Doz. 6
29–541	17	6	3	Doz. 6
29–541	44	65	15	Doz. 6
29–541	45	109	15	Doz. 6
29–541	45	112	15	Doz. 6
29–541	52	112	18	Doz. 6
29–541	52	118	18	Doz. 6
29–905	57	12	22	6
29–2203	15	25	2	1 0
29–3250	20	129	3	6
29–3250	22	24	4	6
29–3319	17	9	3	Doz. 6
29–3319	28	24	8	Doz. 6
29–3319	47	33	16	Doz. 6
29–3319	63	30	25	Doz. 6
29–3319	63	43	25	Doz. 6
29–3319	63	47	25	Doz. 6
29–3448	22	58	4	6
29–3449	22	57	4	6
29–3860	20	11	4	1 4
29–4100	44	34	15	6
29–4101	16	100	2	8
29–4101	16	100	2	8
29–4657	47	28	16	5 0
29–4661	47	30	16	6
29–4662	15	22	2	6
29–4662	47	29	16	6
29–4664	47	32	16	2
29–4665	47	31	16	1 0
29–5283	34	36	10	1 4
29–5289	51	60	18	1 6
29–5310	34	40	10	15 0
29–5313	34	41	10	3 4
29–5315	34	8	10	8
29–5320	34	42	10	2
29–5338	34	35	10	3
29–5347	34	43	10	7 0
29–5871	40	31	13	6
29–6110	57	9	22	1 0
29–7368	49	29	17	1 0
29–7368	52	1	19	1 0
29–7551	25	10	6	1 6
29–7551	32	12	9	1 6
29–7560	27	72	6	3 0
29–7560	30	76	8	3 0
29–7561	27	76	6	4 0
29–7561	30	74	8	4 0
29–7564	27	73	6	6
29–7564	30	75	8	6
29–7581	27	84	6	4 0
29–7581	30	89	8	4 0
29–7583	27	85	6	1 0
29–7583	30	90	8	1 0
29–7670	44	46	15	6
29–7670	55	13	20	6
29–7670	57	17	21	6
29–7796	13	104	1	4
29–7898	45	7	16	5 0
29–7898	54	40	19	5 0
29–7962	44	94	15	6 0

Part No.	Page	Ref. No.	Plate	Price £ s. d.
29-7971	44	87	15	2
29-7971	45	95	15	2
29-8740	28	21	8	6
29-8810	45	8	16	18 0
29-8810	54	34	19	18 0
29-8820	45	16	16	18 0
29-8820	54	49	19	18 0
29-9132	45	98	15	1 8
29-9221	63	25	25	2 6
29-9251	60	2	24	P.O.A.
29-9252	60	11	24	1 0
29-9253	60	4	24	6
29-9342	63	38	25	1 3
30-196	55	89	19	1
30-659	57	16	22	4
30-659	57	21	22	4
30-733	27	66	6	6
30-1194	49	4	18	4
31-68	27	39	6	8
31-222	15	75	2	4
31-7275	57	18	22	8
32-194	25	18A	6	8
32-194	36	22	11	8
32-194	40	25	13	8
32-194	49	24	18	8
33-4089	52	114	18	10
35-33	23	20	5	1
35-33	52	11	19	1
35-33	52	17	19	1
35-33	54	79	19	1
35-37	36	26	11	1
35-37	40	29	13	1
35-698	25	6	6	Doz. 4
35-698	40	8	14	Doz. 4
35-701	36	10	11	Doz. 4
35-701	36	13	11	Doz. 4
35-701	38	5	13	Doz. 4
35-701	40	15	13	Doz. 4
35-702	17	35	3	Doz. 4
35-702	22	28	4	Doz. 4
35-703	12	75	1	Doz. 4
35-709	13	1	2	Doz. 4
35-709	22	37	4	Doz. 4
35-710	27	80	6	Doz. 4
35-710	30	87	8	Doz. 4
35-722	27	43	6	Doz. 4
35-1896	16	88	2	4
35-4005	17	151	2	8
35-4224	15	42	2	Doz. 6
35-6436	36	10	12	Doz. 6
35-6436	40	11	14	Doz. 6
36-382	12	59	1	Doz. 6
36-382	12	92	1	Doz. 6
36-382	13	10	2	Doz. 6
36-382	15	16	2	Doz. 6
36-382	16	99	2	Doz. 6
36-382	16	99	2	Doz. 6
36-382	25	3	6	Doz. 6
36-382	25	16A	6	Doz. 6
36-382	27	47	6	Doz. 6
36-382	27	56	6	Doz. 6
36-382	27	74	6	Doz. 6
36-382	30	58	8	Doz. 6
36-382	30	77	8	Doz. 6
36-382	30	84	8	Doz. 6
36-382	32	24	9	Doz. 6
36-382	34	28	10	Doz. 6
36-382	34	32	10	Doz. 6
36-382	36	20	11	Doz. 6
36-382	40	23	13	Doz. 6
36-382	44	35	15	Doz. 6
36-382	44	38	15	Doz. 6
36-382	44	56	15	Doz. 6
36-382	44	79	15	Doz. 6

Part No.	Page	Ref. No.	Plate	Price £ s. d.
36-382	44	91	15	Doz. 6
36-382	47	55	16	Doz. 6
36-382	47	58	16	Doz. 6
36-382	47	6	17	Doz. 6
36-382	49	32	18	Doz. 6
36-382	54	67	19	Doz. 6
36-382	55	14	20	Doz. 6
36-382	60	23	23	Doz. 6
36-382	63	40	25	Doz. 6
36-382	10	37	1	Doz. 6
36-481	10	28	1	Doz. 1 6
42-48	10	13	1	9 0
42-52	13	116	1	8
42-53	13	123	1	8
42-54	13	118	1	6
42-55	13	114	1	1 0
42-56	13	117	1	8
42-62	13	121	1	1 0
42-63	13	125	1	1 12 0
42-2761	10	30	1	1 10 0
42-2766	10	30	1	1 10 0
42-2774	51	82	18	2 14 0
42-2775	51	82	18	2 14 0
42-3006	22	50	4	4 1 6
42-3010	20	23	4	12 0
42-3018	22	72	4	1 12 0
42-3019	22	72	4	1 2 0
42-3020	22	89	4	7 6
42-3023	22	90	4	18 0
42-3052	23	—	5	P.O.A.
42-3054	25	27	5	2 0 0
42-3056	23	7	5	5 0
42-4071	30	39	8	4
42-4074	30	50	8	2 6
42-4075	30	49	8	8
42-4076	30	45	8	2 0
42-4077	28	7	8	1 0
42-4078	28	20	8	1 3
42-4080	52	9	19	3
42-4102	32	32	9	4 0 0
42-4112	32	26	9	5 0
42-4115	32	27	9	6 6
42-4116	32	13	9	1 3
42-4117	32	14	9	8
42-4132	30	51	8	1 0
42-4155	32	31	9	P.O.A.
42-4211	28	17	8	16 10 0
42-4272	30	60	8	4 6
42-4277	28	14	8	8 0
42-4278	30	36	8	10 0
42-4279	30	36	8	10 0
42-4280	30	37	8	6 0
42-4281	30	37	8	6 0
42-4283	28	15	8	9 6
42-4286	32	25	9	P.O.A.
42-4289	32	21	9	P.O.A.
42-4291	32	22	9	P.O.A.
42-4292	32	28	9	P.O.A.
42-4294	32	20	9	P.O.A.
42-4297	32	25	9	P.O.A.
42-4299	32	20	9	P.O.A.
42-4300	32	25	9	P.O.A.
42-4302	32	20	9	P.O.A.
42-4309	30	73A	8	16 10 0
42-4502	30	65	8	2 0
42-4503	30	64	8	2 0
42-4503	30	70	8	2 0
42-4505	30	68	8	8
42-4506	30	69	8	8
42-4514	30	63	8	14 0
42-4515	30	59	8	4 0
42-4516	30	64	8	2 6
42-4573	28	28	8	P.O.A.
42-4574	28	25	8	3

Part No.	Page	Ref. No.	Plate	Price £ s. d.
42–4582	30	61	8	P.O.A.
42–4585	28	28	8	7
42–4713	32	4	9	10
42–4714	32	5	9	1 0
42–4725	32	1	9	1 10 0
42–4769	30	80	8	18 0
42–4772	30	83	8	12 6
42–4776	30	85	8	12 0
42–4804	32	10	9	10 0
42–4805	32	41	9	8 0
42–4806	32	9	9	5 0
42–4808	32	11	9	2 0
42–4899	60	—	23	4 0 0
42–4900	60	10	23	3 6 0
42–4904	60	5	23	2 6
42–4905	60	8	23	8
42–4906	57	5	21	5 0
42–4906	60	4	23	5 0
42–4907	60	11	23	6
42–4910	60	12	23	1 12 0
42–4914	60	13	23	1 12 0
42–5005	34	—	10	16 17 6
42–5010	34	5	10	1 11 0
42–5012	34	19	10	2 0 0
42–5014	34	23	10	1 9
42–5015	34	19	10	2 0 0
42–5033	34	—	10	17 5 6
42–5035	34	55	10	1 13 0
42–6011	40	—	14	Doz. 3 6
42–6030	42	46	14	17 0
42–6033	42	44	14	2 6
42–6034	40	10	14	4 6
42–6036	40	7	14	1 3
42–6037	40	9	14	8
42–6040	32	37	9	8
42–6045	42	51	14	6 0
42–6046	42	50	14	8
42–6759	51	57	18	8
42–6759	51	57	18	8
42–6761	52	98	18	1 6
42–6762	52	98	18	1 6
42–6763	32	17	9	1 0
42–6782	52	101	18	3
42–6782	52	101	18	3
42–6783	52	103	18	3
42–6799	52	18	19	2 0
42–6820	52	105	18	2 0
42–6822	51	91	18	6 0
42–6824	51	91	18	6 0
42–6839	52	104	18	2 5 0
42–6841	52	104	18	2 5 0
42–6853	51	56	18	8
42–6853	51	56	18	8
42–6856	52	104	18	2 5 0
42–6858	51	91	18	6 0
42–6860	51	91	18	6 0
42–6920	60	18	23	1 5 0
42–7003	54	84	19	15 9
42–7007	52	5	19	5 0
42–7012	55	87	19	3 6
42–7205	57	—	21	3 0 0
42–7206	57	14	21	17 6
42–7207	57	3	21	17 6
42–7208	57	10	21	2 8
42–7208	57	16	21	2 8
42–7210	57	7	21	1 0
42–7211	57	8	21	1 0
42–7212	57	9	21	4 0
42–7503	23	23	5	1 15 0
42–7504	23	24	5	1 0
42–7506	25	38	5	2 5 0
42–7507	25	29	5	6
42–7509	25	39	5	4
42–7510	25	37	5	4
42–7701	49	1	18	1 2 6
42–7703	52	116	18	6
42–8010	54	35	19	1 0
42–8011	54	36	19	1 3
42–8012	54	38	19	6
42–8020	45	23A	16	6
42–8020	54	54	19	6
42–8034	45	24	16	1
42–8034	54	53	19	1
42–8043	54	39	19	10 0 0
42–8044	54	39	19	10 0 0
42–8045	54	39	19	10 0 0
42–8046	54	39	19	9 10 0
42–8047	54	39	19	9 10 0
42–8048	54	39	19	9 10 0
42–8051	54	71	19	1 3
42–8052	54	70	19	9
42–8058	54	69	19	9
42–8070	55	90	19	9 0
42–8075	55	93	19	6 0
42–8326	51	66	18	1 0
42–8329	51	70	18	6
42–8330	51	72	18	3
42–8331	51	63	18	3
42–8331	51	71	18	3
42–8334	51	49	18	5 0
42–8339	51	62	18	6
42–8339	52	12	19	6
42–8340	51	65	18	6
42–8341	51	67	18	3
42–8341	51	73	18	3
42–8342	51	41	18	5
42–8343	51	50	18	2
42–8346	51	54	18	8 0
42–8347	51	55	18	8 0
42–8351	51	76A	18	2 6
42–8367	51	44	18	2 10 0
42–9009	63	3	25	5
42–9012	63	13	25	4
42–9026	60	7	24	6 0
42–9027	63	31	25	1
42–9031	60	20	24	1 6
42–9032	30	67	8	P.O.A.
42–9033	40	13	14	P.O.A.
42–9038	52	6	19	1 12 0
42–9045	63	2	25	P.O.A.
42–9057	54	81	19	1 9
42–9058	54	80	19	1 8
42–9060	54	75	19	6
42–9061	52	15	19	8
42–9063	54	81	19	1 4
42–9072	52	19	19	P.O.A.
42–9075	60	22	23	1 5 0
42–9080	60	18	24	P.O.A.
65–109	23	18	5	6
65–114	10	47	1	P.O.A.
65–213	10	46	1	P.O.A.
65–292	49	2	18	6
65–292	52	7	19	6
65–311	10	27	1	6
65–317	10	12	1	9
65–440	12	64	1	4 6
65–615	12	85	1	4
65–695	32	39	9	Doz. 4
65–1162	12	57	1	Doz. 4
65–1232	12	57	1	Doz. 4
65–1232	12	57	1	Doz. 4
65–1340	10	47	1	P.O.A.
65–2060	42	4	15	4
65–2060	44	89	15	4
65–2060	45	97	15	4
65–2153	10	9	1	2

Part No.	Page	Ref. No.	Plate	Price £ s. d.
65–2157	22	43	4	4
65–2252	15	71	2	10
65–2352	15	24	2	8
65–2352	45	27	16	8
65–2353	47	39	16	8
65–3061	22	27	4	6
65–3063	15	49	2	6
65–3063	23	3	5	6
65–3337	19	84	3	2 6
65–3360	19	40	3	4 0
65–3360	22	31	4	4 0
65–3361	20	126	3	4
65–3361	22	26	4	4
65–3364	17	142	2	2 4
65–3364	25	36	5	2 4
65–3375	17	32	3	4
65–3375	22	81	4	4
65–3377	17	34	3	1 6
65–3377	22	79	4	1 6
65–3381	23	115	4	14 6
65–3381	20	119	3	14 6
65–3390	17	31	3	7 0
65–3390	22	82	4	7 0
65–3391	17	29	3	8
65–3391	22	84	4	8
65–3392	17	30	3	1
65–3392	22	83	4	1
65–3397	20	130	3	10
65–3397	23	116	4	10
65–3403	17	39	3	2 0
65–3403	22	30	4	2 0
65–3417	20	128	3	12 6
65–3822	25	33	5	4
65–3824	25	30	5	3 0
65–3833	23	14	5	2 6
65–3857	25	31	5	12 0
65–3858	23	8	5	P.O.A.
65–3872	23	26	5	3 6
65–3873	23	13	5	7 0
65–3910	23	10	5	8
65–3911	23	9	5	3 0
65–3912	25	28	5	3 0
65–4182	28	1	8	8
65–4182	28	13	8	8
65–4185	32	19	9	10
65–4185	60	9	23	10
65–4727	32	3	9	3 0
65–4742	27	79	6	1 2
65–4742	30	88	8	1 2
65–4811	32	42	9	5 0
65–4960	45	18	16	1 5 0
65–4960	54	42	19	1 5 0
65–5111	42	47	14	Doz. 6
65–5126	34	16	10	2 6
65–5127	34	18	10	2 6
65–5295	34	45	10	1 0
65–5327	34	51	10	4
65–5328	34	25	10	3 0
65–5331	34	6	10	3 0
65–5332	34	7	10	2
65–5333	34	13	10	2 6
65–5334	34	11	10	8
65–5380	34	22	10	P.O.A.
65–5390	34	38	10	5 0
65–5391	34	38	10	5 0
65–5420	34	44	10	2 15 0
65–5424	34	39	10	8 0
65–5430	34	5	10	1 11 0
65–5435	34	33	10	1 6
65–5448	34	55	10	1 13 0
65–5674	36	6	12	2
65–5674	40	4	14	2
65–5883	42	36	14	P.O.A.
65–5883	36	1	11	P.O.A.
65–5883	36	6	11	P.O.A.
65–5883	38	21	12	P.O.A.
65–5883	38	30	12	P.O.A.
65–5883	38	7	13	P.O.A.
65–5883	40	13	13	P.O.A.
65–5883	40	14	14	P.O.A.
65–5883	42	25	14	P.O.A.
65–5884	38	29	12	4
65–5884	42	35	14	4
65–5885	40	19	14	2 6
65–5886	42	27	14	2
65–5887	42	26	14	2
65–5890	42	29	14	8
65–5899	38	42	12	1 4
65–5901	36	9	12	10 6
65–5901	42	43	14	10 6
65–5903	36	11	12	P.O.A.
65–5903	40	12	14	P.O.A.
65–5904	36	33	11	6
65–5904	38	41	12	6
65–5904	40	19	13	6
65–5904	42	42	14	6
65–5905	36	8	12	4 0
65–5907	36	30	11	1 0
65–5907	40	38	13	1 0
65–5912	63	49	25	2
65–6274	49	27	17	8
65–6274	52	2	19	8
65–6576	47	15	17	5 0
65–6576	49	39	18	5 0
65–6605	49	18	17	1 0 0
65–6606	42	19	15	3 6
65–6606	54	61	19	3 6
65–6606	49	20	17	3 6
65–6607	49	19	17	9 0
65–6608	49	23	17	13 0
65–8038	16	125	2	1
65–8201	47	12	17	2
65–8205	47	10	17	3 6
65–8205	54	72	19	3 6
65–8206	47	10	17	3 6
65–8206	54	72	19	3 6
65–8220	45	23	16	8 0
65–8220	54	56	19	8 0
65–8317	45	22	16	2
65–8317	54	57	19	2
65–8326	45	6	16	1 0
65–8420	42	6	15	1 4
65–8421	42	8	15	1
65–8422	42	3	15	2
65–8422	42	5	15	2
65–8422	44	81	15	2
65–8422	44	88	15	2
65–8422	44	90	15	2
65–8422	45	99	15	2
65–8424	42	7	15	10
65–8500	44	51	15	2 4
65–8500	51	42	18	2 4
65–8501	45	9	16	10 6
65–8501	54	33	19	10 6
65–8502	54	48	19	1 6
65–8502	45	15	16	1 6
65–8503	52	24	19	1 0
65–8504	52	25	19	3 6
65–8505	54	30	19	3 0
65–8506	54	31	19	3 0
65–8675	45	19	16	4 2
65–8714	45	13	16	7 6
65–8714	54	46	19	7 6
65–9125	60	13	24	2
65–9205	60	6	24	2 0
65–9228	63	48	25	3
65–9231	63	45	25	P.O.A.
65–9235	63	32	25	P.O.A.

Part No.	Page	Ref. No.	Plate	Price £ s. d.
65–9240	60	14	24	1 6
65–9243	60	19	24	2 0
65–9245	60	8	24	3 6
65–9246	60	9	24	1 3
65–9267	63	22	25	P.O.A.
65–9271	28	19	8	P.O.A.
66–102	10	48	1	2
66–954	12	63	1	2
66–1683	15	70	2	Doz. 6
66–2010	32	23	9	6
66–3074	15	44	2	4
66–3074	16	132	2	4
66–3074	20	109	3	4
66–3074	23	97	4	4
66–3074	23	22	5	4
66–3781	23	6	5	4
66–3787	25	34	5	2 0
66–3800	23	5	5	4
66–3891	23	11	5	P.O.A.
66–3903	25	32	5	10 0
66–4149	28	16	8	3 0
66–4163	30	38	8	10
66–4175	25	32	6	1 0
66–4603	28	18	7	8
66–4707	16	120	2	Doz. 6
66–4707	17	150	2	Doz. 6
66–4707	25	12	6	Doz. 6
66–4707	25	24	6	Doz. 6
66–4707	27	40	6	Doz. 6
66–4707	27	49	6	Doz. 6
66–4707	28	7	7	Doz. 6
66–4707	28	22	8	Doz. 6
66–4707	32	34	9	Doz. 6
66–4707	45	20	16	Doz. 6
66–4707	47	41	16	Doz. 6
66–4707	55	86	19	Doz. 6
66–4708	25	21	6	Doz. 1 4
66–4708	25	25	6	Doz. 1 4
66–4708	27	65	6	Doz. 1 4
66–4708	36	29	11	Doz. 1 4
66–4708	36	2	12	Doz. 1 4
66–4708	40	36	13	Doz. 1 4
66–4708	40	2	14	Doz. 1 4
66–4708	57	17	22	Doz. 1 4
66–4708	57	20	22	Doz. 1 4
66–4822	57	22	22	1 12 9
66–4823	57	22	22	1 12 9
66–5089	34	19	10	2 0 0
66–5097	34	8	10	6
66–5204	34	15	10	8
66–7351	55	16	20	2 8
66–7353	55	1	20	1 0
66–7353	57	15	21	1 0
66–7363	57	11	22	1 6
66–7518	44	29	15	1
66–7520	23	25	5	2 6
66–7523	23	15	5	6
66–8810	45	14	16	9 0
66–8810	54	47	19	9 0
66–8896	45	10	16	9 0
66–8896	54	45	19	9 0
66–9132	60	16	24	2 0
67–31	10	5	1	4 6
67–33	10	6	1	1 4
67–34	10	2	1	1 4
67–42	16	141	2	2
67–42	25	35	5	2
67–42	44	50	15	2
67–42	51	43	18	2
67–56	10	24	1	1 0
67–60	10	21	1	2
67–61	10	29	1	2
67–62	10	22	1	1
67–64	10	20	1	10 0
67–74	15	14	2	4
67–74	15	20	2	4
67–101	12	63	1	2
67–101	12	63	1	2
67–120	12	58	1	1 0
67–130	15	79	2	7 0
67–132	15	48	2	4
67–133	15	47	2	4
67–133	15	50	2	4
67–134	16	82	2	2
67–135	16	82	2	2
67–136	16	82	2	2
67–137	16	82	2	2
67–226	12	74	1	Pair 14 0
67–254	10	39	1	10
67–255	10	49	1	4 0
67–256	10	50	1	2
67–258	10	40	1	10
67–259	10	15	1	1 12 0
67–261	10	17	1	1 0
67–263	10	11	1	5 0
67–264	10	33	1	11 0
67–265	10	31	1	11 0
67–266	10	23	1	11 0
67–267	10	26	1	11 0
67–268	12	87	1	2 11 6
67–276	13	96	1	1
67–277	10	18	1	1
67–278	12	53	1	1
67–279	10	8	1	3
67–280	12	56	1	4
67–281	15	28	2	3
67–282	15	45	2	4
67–283	12	52	1	8
67–283	12	52	1	8
67–284	15	35	2	18 6
67–286	15	77	2	4 0
67–287	15	46	2	1 10 0
67–296	15	37	2	7 0
67–297	12	77	1	1
67–298	12	88	1	2 6
67–299	13	97	1	1
67–301	12	73	1	5
67–302	12	79	1	2
67–311	12	62	1	1 11
67–314	12	61	1	2 8
67–317	12	66	1	2 11 6
67–320	12	68	1	Pair 14 0
67–323	10	7	1	15 0
67–324	10	19	1	15 0
67–331	13	94	1	1 0
67–332	13	98	1	8 0
67–333	13	99	1	9 0
67–334	16	89	2	2 3 0
67–335	15	78	2	16 4
67–337	16	85	2	10 6
67–339	12	89	1	5 0
67–340	16	107	2	4 0
67–343	12	55	1	8
67–346	10	35	1	2 6
67–347	10	34	1	4
67–350	15	18	2	6
67–350	30	34	8	6
67–352	16	101	2	6
67–352	16	101	2	6
67–352	17	147	2	6
67–353	15	26	2	3
67–354	25	15A	6	1 4
67–355	15	17	2	6
67–356	16	89	2	2 3 0
67–360	13	101	1	4 6
67–362	13	100	1	4 6
67–382	10	49	1	2 6
67–382	10	49	1	2 6

Part No.	Page	Ref. No.	Plate	Price £	s.	d.
67-384	12	86	1	10	10	0
67-386	12	66	1	2	11	6
67-389	12	87	1	2	11	6
67-392	12	64	1		4	0
67-392	12	64	1		4	0
67-393	12	88	1		2	6
67-394	10	7	1		15	0
67-395	10	19	1		15	0
67-396	13	101	1		4	6
67-398	13	100	1		4	6
67-407	12	62	1		1	11
67-407	12	62	1		1	11
67-410	12	61	1		2	8
67-410	12	61	1		2	8
67-423	12	65	1	1	8	10
67-439	10	4	1		1	3
67-440	10	3	1			6
67-450	10	13	1		9	0
67-453	17	146	2	6	14	0
67-455	17	148	2	7	2	0
67-460	12	65	1	1	8	4
67-527	12	58	1		1	0
67-529	10	47	1		P.O.A.	
67-531	10	7	1		17	0
67-532	10	19	1		17	0
67-533	12	65	1	1	9	6
67-540	16	112	2		15	0
67-566	13	127	1	1	17	6
67-642	12	82	1		5	6
67-643	12	80	1			4
67-644	12	81	1			1
67-645	12	90	1			1
67-648	12	83	1		10	0
67-664	12	86	1	10	10	0
67-670	12	70	1		P.O.A.	
67-671	12	69	1			2
67-672	12	69	1			2
67-674	12	72	1		3	0
67-685	16	84	2			1
67-686	16	87	2		4	6
67-686	16	90	2		4	6
67-686	16	91	2		4	6
67-707	16	92	2		6	0
67-708	15	76	2			1
67-721	15	41	2		7	0
67-727	15	38	2		4	0
67-729	15	39	2			1
67-922	16	96	2		1	0
67-923	16	95	2			3
67-1033	12	67	1		2	6
67-1034	12	76	1		1	0
67-1061	10	41	1	9	0	0
67-1063	10	41	1	9	17	6
67-1065	10	41	1	9	0	0
67-1070	13	93	1	7	0	0
67-1074	13	93	1	7	5	0
67-1085	16	102	2	4	16	0
67-1087	16	106	2	6	18	6
67-1093	15	72	2		3	6
67-1097	13	6	2		12	0
67-1098	13	2	2		2	6
67-1101	13	126	1	12	15	0
67-1110	10	5	1		9	0
67-1112	13	106	1		17	6
67-1114	12	52	1			9
67-1115	10	39	1			10
67-1116	10	39	1		1	0
67-1117	13	111	1			4
67-1118	13	103	1			6
67-1119	13	109	1			6
67-1120	13	105	1			1
67-1132	13	5	2		9	0
67-1133	13	5	2		9	0
67-1134	17	155	2		11	0

Part No.	Page	Ref. No.	Plate	Price £	s.	d.
67-1135	13	4	2		7	0
67-1136	13	3	2		3	6
67-1137	13	2	2		2	6
67-1138	17	156	2		3	0
67-1235	17	153	2			4
67-1236	15	19	2			3
67-1241	16	136	2			4
67-1242	16	137	2		1	6
67-1243	16	135	2			2
67-1244	16	134	2		Doz.	4
67-1245	12	54	1			4
67-1245	12	54	1			4
67-1245	13	110	1			4
67-1245	15	11	2			4
67-1251	25	13	6			10
67-1258	13	8	2			1
67-1259	13	7	2		2	6
67-1261	16	127	2		7	6
67-1262	16	128	2			8
67-1263	16	126	2			4
67-1264	16	124	2			6
67-1266	16	130	2			5
67-1268	16	129	2			8
67-1280	16	109	2			2
67-1281	16	108	2			1
67-1285	15	73	2		3	6
67-1288	15	74	2			1
67-1292	15	15	2			6
67-1292	28	32	8			6
67-1382	15	59	2		8	0
67-1383	15	56	2		5	0
67-1384	15	55	2		2	6
67-1385	15	64	2		3	6
67-1386	15	60	2		3	0
67-1387	15	61	2			4
67-1388	15	54	2		8	0
67-1389	15	53	2		3	0
67-1390	15	51	2			3
67-1391	15	62	2		1	0
67-1392	15	63	2			2
67-1393	15	65	2			1
67-1394	15	67	2			1
67-1395	15	66	2			3
67-1396	15	68	2			3
67-1400	16	104	2			1
67-1401	16	103	2			2
67-1461	16	118	2		7	4
67-1463	16	121	2			1
67-1466	16	122	2			1
67-1467	16	119	2			6
67-1467	17	152	2			6
67-1496	15	32	2		Doz. 2	6
67-1498	15	33	2			1
67-1499	15	29	2			1
67-1503	15	30	2		4	0
67-1505	15	34	2			8
67-1701	16	139	2		2 8	0
67-1702	16	140	2			4
67-1703	16	138	2		P.O.A.	
67-1704	16	131	2			6
67-1705	17	145	2			4
67-1705	20	117	3			4
67-1705	23	103	4			4
67-1706	16	133	2			4
67-1706	20	123	3			4
67-1706	23	1	5			4
67-1709	17	144	2		Doz.	4
67-1709	23	2	5		Doz.	4
67-1710	17	154	2			2
67-1710	44	74	15			2
67-1711	17	143	2			4
67-1711	23	1	5			4
67-1876	15	23	2		1	4
67-1882	16	86	2		P.O.A.	

Part No.	Page	Ref. No.	Plate	Price £	s.	d.
67–2050	16	114	2	1	5	0
67–2054	16	117	2		2	6
67–2055	16	115	2		7	0
67–2056	12	71	1			1
67–2057	12	71	1			1
67–2058	12	71	1			1
67–2062	13	3	2		3	0
67–2062	16	116	2		3	0
67–2071	16	113	2		12	0
67–2675	10	30	1	1	10	0
67–2679	10	32	1	1	10	0
67–2694	10	44	1		3	6
67–2711	45	110	15	2	14	0
67–2720	10	30	1	1	10	0
67–2722	10	32	1	1	10	0
67–3014	17	1	3	4	1	6
67–3017	19	57	3	2	12	8
67–3021	20	114	3	2	0	0
67–3023	19	71	3			6
67–3023	22	61	4			6
67–3024	20	121	3		2	6
67–3024	23	110	4		2	6
67–3026	20	1	4			6
67–3026	19	68	3			6
67–3027	17	3	3			3
67–3028	20	101	3			6
67–3028	20	15	4			6
67–3031	17	2	3			2
67–3032	20	110	3			2
67–3033	20	122	3			2
67–3033	23	109	4			2
67–3034	23	106	4			4
67–3053	17	26	3		2	0
67–3053	22	56	4		2	0
67–3061	19	73	3	1	13	0
67–3064	17	28	3		13	6
67–3065	17	28	3		15	0
67–3065	22	54	4		15	0
67–3067	19	67	3		2	6
67–3067	20	2	4		2	6
67–3073	20	4	4			9
67–3073	19	65	3			9
67–3080	19	64	3		1	0
67–3080	20	6	4		1	0
67–3088	19	89	3		2	6
67–3088	22	78	4		2	6
67–3093	19	96	3		2	6
67–3093	23	94	4		2	6
67–3097	19	83	3		18	0
67–3099	19	88	3		5	0
67–3099	23	96	4		5	0
67–3101	19	75	3			1
67–3101	19	85	3			1
67–3101	20	12	4			1
67–3101	22	71	4			1
67–3112	17	4	3		Doz.	6
67–3113	19	55	3	1	5	0
67–3116	19	60	3		3	0
67–3116	22	49	4		3	0
67–3117	19	61	3			2
67–3117	22	53	4			2
67–3119	22	64	4		1	0
67–3120	19	79	3		1	0
67–3120	22	67	4		1	0
67–3121	19	77	3			2
67–3121	22	65	4			2
67–3122	19	78	3			4
67–3122	22	66	4			4
67–3128	19	90	3		Doz.	6
67–3128	23	95	4		Doz.	6
67–3130	19	47	3	1	2	0
67–3131	19	48	3		12	0
67–3132	19	53	3		9	0
67–3133	19	49	3			3
67–3134	19	52	3			4
67–3135	19	51	3			2
67–3136	19	54	3			6
67–3137	17	5	3		6	6
67–3140	19	42	3		1	6
67–3143	19	44	3		7	0
67–3144	19	47	3			2
67–3145	19	46	3			1
67–3146	19	45	3			4
67–3147	19	43	3		4	6
67–3151	19	95	3		2	0
67–3151	22	75	4		2	0
67–3152	19	99	3			6
67–3152	22	76	4			6
67–3153	19	91	3		1	6
67–3153	22	86	4		1	6
67–3161	20	102	3			1
67–3161	20	16	4			1
67–3162	20	103	3			2
67–3162	20	18	4			2
67–3163	20	108	3			5
67–3163	20	22	4			5
67–3164	20	107	3			2
67–3164	20	21	4			2
67–3167	20	106	3		3	6
67–3167	20	20	4		3	6
67–3168	20	105	3		5	0
67–3168	20	19	4		5	0
67–3169	20	104	3		3	0
67–3169	20	17	4		3	0
67–3170	19	50	3		2	0
67–3170	22	42	4		2	0
67–3173	19	94A	3			9
67–3173	22	85	4			9
67–3174	19	92	3		1	3
67–3174	22	88	4		1	3
67–3175	17	33	3		5	0
67–3175	22	80	4		5	0
67–3176	20	124	3			6
67–3176	23	107	4			6
67–3178	19	94	3		19	0
67–3178	22	77	4		19	0
67–3180	22	32	4		10	0
67–3180	19	41	3		10	0
67–3183	19	72	3		1	4
67–3190	19	73	3	2	0	6
67–3191	19	58	3		7	6
67–3191	20	13	4		7	6
67–3192	19	63	3	1	12	0
67–3192	20	5	4	1	12	0
67–3194	19	86	3	1	12	0
67–3195	19	86	3	1	2	0
67–3196	19	80	3		7	6
67–3197	19	81	3		18	0
67–3198	19	82	3		14	0
67–3198	22	91	4		14	0
67–3199	19	76	3		18	0
67–3199	19	83	3		18	0
67–3199	23	93	4		18	0
67–3201	19	62	3		14	0
67–3201	20	7	4		14	0
67–3202	19	59	3		18	0
67–3202	20	8	4		18	0
67–3203	19	87	3		1	0
67–3203	22	92	4		1	0
67–3204	19	56	3		13	0
67–3204	22	69	4		13	0
67–3206	19	73	3	1	16	0
67–3207	19	63	3	1	12	0
67–3209	19	62	3		14	0
67–3210	19	62	3		18	0
67–3211	19	82	3		18	0
67–3212	19	82	3		14	0
67–3230	22	70	4		7	0

Part No.	Page	Ref. No.	Plate	Price £	s.	d.
67–3237	17	22	3	1	10	0
67–3240	17	19	3		2	0
67–3241	17	16	3		2	0
67–3242	17	17	3		12	0
67–3244	17	18	3	P.O.A.		
67–3245	17	15	3		6	0
67–3247	17	13	3			4
67–3248	17	14	3			5
67–3249	17	12	3		1	0
67–3251	19	74	3		1	0
67–3253	17	21	3			2
67–3257	17	20	3			8
67–3263	17	11	3		2	0
67–3264	17	10	3			2
67–3266	17	8	3	Doz.	1	6
67–3271	17	23	3	3	5	0
67–3276	17	25	3		3	0
67–3277	17	25	3		3	0
67–3278	17	25	3		3	0
67–3327	22	68	4		1	6
67–3328	22	51	4			2
67–3329	20	9	4	2	0	6
67–3330	20	9	4	1	13	0
67–3332	22	48	4	1	5	0
67–3335	22	38	4		9	3
67–3340	22	36	4		1	0
67–3341	22	39	4		2	6
67–3342	22	40	4			4
67–3344	22	44	4	2	12	8
67–3346	22	46	4			2
67–3347	22	47	4		9	0
67–3350	22	45	4			8
67–3351	23	101	4	2	0	0
67–3353	22	35	4		2	0
67–3354	23	98	4			2
67–4027	27	62	6		1	2
67–4027	27	68	6		1	2
67–4028	25	41	5			4
67–4028	25	2	6			4
67–4029	25	7	6			4
67–4030	30	63	8		1	2
67–4030	44	43	15		1	2
67–4030	25	27	6		1	2
67–4032	55	88	19			6
67–4036	25	19	6		2	0
67–4038	25	1	6	Doz.		6
67–4040	27	37	6			6
67–4040	30	73	8			6
67–4041	25	7	6			4
67–4056	25	18	6	9	10	0
67–4094	27	45	6	9	10	0
67–4120	27	44	6		6	0
67–4122	27	54	6		1	6
67–4125	28	11	7		18	6
67–4126	28	11	7		16	6
67–4127	28	19	7		1	0
67–4128	27	48	6		1	0
67–4129	27	50	6			1
67–4129	32	33	9			1
67–4130	27	38	6		6	0
67–4132	28	6	7		7	0
67–4166	28	1	7		1	6
67–4171	25	20	6		4	3
67–4173	25	15	6		4	3
67–4183	27	71	6		2	0
67–4183	27	71	6		2	0
67–4189	27	39A	6		5	0
67–4588	45	26	16			2
67–4588	28	27	8			2
67–4589	47	1	17		5	0
67–4594	47	38	16	1	5	0
67–4596	45	25	16		5	0
67–4600	47	37	16	P.O.A.		
67–4816	27	78	6	2	0	0

Part No.	Page	Ref. No.	Plate	Price £	s.	d.
67–4847	27	77	6		3	0
67–4848	25	4	6		2	6
67–4851	25	8	6		8	0
67–4852	25	9	6		1	6
67–4856	25	9	6		1	6
67–4873	57	14	22		8	0
67–4875	57	15	22		2	6
67–4902	27	83	6		11	6
67–4903	27	83	6		9	6
67–4907	27	82	6			8
67–4907	30	81	8			8
67–4919	57	—	22	3	8	6
67–4920	57	5	22	3	6	0
67–4925	57	4	22		1	0
67–4926	57	—	22	1	4	0
67–4928	57	8	22		2	0
67–4932	57	7	22	1	4	0
67–5009	34	37	10		7	0
67–5021	34	20	10		6	0
67–5023	34	10	10		5	0
67–5024	34	9	10		4	0
67–5050	34	44	10	2	15	0
67–5057	34	47	10	2	15	0
67–5077	34	—	10	16	17	6
67–5080	34	2	10			2
67–5084	34	4	10	1	13	0
67–5087	34	1	10			6
67–5088	34	3	10		1	0
67–5103	34	—	10	17	5	6
67–5542	36	—	11	7	0	0
67–5542	38	—	13	7	0	0
67–5543	36	36	11	1	5	9
67–5543	38	10	13	1	5	9
67–5544	36	12	11	Doz.	3	6
67–5544	38	1	13	Doz.	3	6
67–5545	36	4	11	Doz.	3	6
67–5545	38	11	13	Doz.	3	6
67–5547	36	3	11	5	1	0
67–5547	38	9	13	5	1	0
67–5555	36	18	11	1	10	0
67–5555	40	21	13	1	10	0
67–5558	36	34	11		15	0
67–5558	40	42	13		15	0
67–5561	36	8	11		2	6
67–5561	38	4	13		2	6
67–5562	36	14	11		2	6
67–5562	40	16	13		2	6
67–5563	36	7	11			2
67–5563	38	6	13			2
67–5564	36	35	11			2
67–5564	40	14	13			2
67–5565	36	2	11		4	0
67–5565	38	12	13		4	0
67–5566	36	9	11		16	0
67–5566	38	3	13		16	0
67–5567	40	40	13		3	0
67–5571	36	17	11		6	7
67–5571	40	18	13		6	7
67–5572	36	32	11		4	0
67–5572	40	41	13		4	0
67–5575	36	15	11	Doz.		6
67–5575	40	17	13	Doz.		6
67–5576	36	16	11		2	3
67–5576	40	20	13		2	3
67–5578	36	21	11		1	6
67–5578	40	24	13		1	6
67–6005/41	38	35	12	1	5	9
67–6005/42	38	35	12	1	5	9
67–6005/43	38	35	12	1	5	9
67–6005	40	21	14	1	5	9
67–6012/41	36	—	12	6	0	0
67–6012/42	36	—	12	6	0	0
67–6012/43	36	—	12	6	0	0
67–6016	38	33	12	Doz.	3	6

Part No.	Page	Ref. No.	Plate	Price £	s.	d.
67–6016	42	31	14	Doz.	3	6
67–6017	38	18	12	Doz.	3	6
67–6017	40	22	14	Doz.	3	6
67–6027	42	44	14		10	0
67–6028	42	30	14		1	8
67–6030	40	17	14		4	0
67–6031	42	38	14		1	4
67–6032	42	45	14			8
67–6033	40	15	14			2
67–6034	40	16	14			6
67–6038	38	31	12			6
67–6038	42	37	14			6
67–6039	38	39	12			1
67–6039	42	40	14			1
67–6046	42	49	14		1	0
67–6051	38	27	12			8
67–6051	42	33	14			8
67–6053	36	4	12		6	0
67–6060	38	36	12		6	6
67–6061	38	28	12		4	0
67–6066	38	26	12	1	10	0
67–6067	38	16	12			6
67–6072	38	15	12			1
67–6073	38	46	12		1	6
67–6074	38	45	12		2	3
67–6075	38	24	12			5
67–6076	38	17	12		2	0
67–6076	38	23	12		2	0
67–6077	38	22	12		1	0
67–6078	36	12	12		1	0
67–6081	36	5	12		1	0
67–6101	38	37	12		11	0
67–6101	40	18	14		11	0
67–6123	38	38	12	2	5	0
67–6124	38	38	12	2	5	0
67–6126	38	20	12	3	17	0
67–6128	38	25	12		2	0
67–6133	42	28	14		1	6
67–6136	40	24	14	4	0	0
67–6149	42	39	14	2	2	6
67–6150	38	38	12	2	2	6
67–6154	38	38	12	2	5	0
67–6161	42	32	14		17	0
67–6164	38	34	12		16	0
67–6180	36	7	12	1	15	0
67–6530	42	10	15		13	0
67–6530	54	63	19		13	0
67–6543	42	26	15	2	5	0
67–6543	54	65	19	2	5	0
67–6544	42	24	15		8	0
67–6544	54	59	19		8	0
67–6546	42	18	15			1
67–6546	54	60	19			1
67–6547	42	25	15			1
67–6547	54	58	19			1
67–6556	51	45	18	1	0	0
67–6557	49	19	18		9	0
67–6558	49	16	18		13	0
67–6559	49	33	18		3	6
67–6560	49	13	18		1	0
67–6761	44	44	15			6
67–6766	44	40	15		1	0
67–6767	44	83	15		1	0
67–6772	44	62	15		13	6
67–6774	44	66	15		13	6
67–6830	44	58	15		13	6
67–6830	44	58	15		13	6
67–6830	51	77	18		13	6
67–6830	51	77	18		13	6
67–6839	44	59	15			2
67–6839	51	79	18			2
67–6841	44	60	15	2	5	0
67–6851	44	55	15			8
67–6851	51	76	18			8

Part No.	Page	Ref. No.	Plate	Price £	s.	d.
67–6921	25	29	6	1	5	0
67–7026	27	58	6		15	0
67–7027	27	61	6		6	6
67–7031	49	28	17		1	0
67–7032	27	57	6		1	0
67–7033	49	24	17			5
67–7037	27	70	6			3
67–7201	55	—	20	3	0	0
67–7202	55	10	20		17	6
67–7203	55	8	20		2	6
67–7204	55	4	20			10
67–7205	55	3	20		3	0
67–7205	55	5	20		3	0
67–7205	57	4	21		3	0
67–7208	55	17	20		4	0
67–7208	57	1	21		4	0
67–7778	45	104	15	1	2	6
67–8059	55	94	19			1
67–8060	55	95	19			8
67–8070	47	13	17		4	0
67–8070	54	52	19		4	0
67–8071	47	13	17		4	0
67–8071	54	51	19		4	0
67–8076	47	13	17			8
67–8085	47	5	17			9
67–8087	55	90	19		10	0
67–8087	47	47	16		10	0
67–8088	47	47	16		10	0
67–8092	47	46	16		5	0
67–8092	54	73	19		5	0
67–8104	45	2	16	8	10	0
67–8105	47	3	17	9	10	0
67–8108	45	3	16			3
67–8108	47	44	16			3
67–8109	45	4	16			9
67–8109	47	42	16			9
67–8110	47	45	16		1	3
67–8111	47	2	17			6
67–8116	47	11	17		12	6
67–8116	54	50	19		12	6
67–8126	45	2	16	9	10	0
67–8309	45	96	15		5	0
67–8313	44	39	15			4
67–8313	44	49	15			4
67–8313	47	35	16			4
67–8313	51	94	18			4
67–8324	45	106	15		1	4
67–8326	45	105	15			3
67–8334	44	47	15	2	0	0
67–8521	45	11	16		2	6
67–8521	54	44	19		2	6
67–8555	45	12	16		2	6
67–8555	54	43	19		2	6
67–8592	54	43	19		2	6
67–8592	45	12	16		2	6
67–8595	45	11	16		2	6
67–8595	54	44	19		2	6
67–8610	45	19	16		4	2
67–8610	54	41	19		4	2
67–8681	45	17	16		4	7
67–8681	54	51	19		4	7
67–9002	44	75	15	1	1	0
67–9023	60	12	24		1	8
67–9026	60	10	24		3	9
67–9028	60	15	24		4	0
67–9041	38	13	12		P.O.A.	
67–9045	38	13	12		P.O.A.	
67–9046	38	13	12		P.O.A.	
67–9047	60	13	24			4
67–9054	44	54	15		P.O.A.	
67–9063	63	22	25		P.O.A.	
67–9067	44	58A	15		P.O.A.	
67–9067	51	78	18		P.O.A.	
67–9068	63	1	25		P.O.A.	

NUMERICAL INDEX "A" GROUP—*continued*

Part No.	Page	Ref. No.	Plate	Price £ s. d.
67–9069	45	113	15	P.O.A.
67–9069	52	117	18	P.O.A.
67–9087	45	1	16	P.O.A.
67–9089	47	50	16	P.O.A.
67–9093	47	57	16	**2 0**
67–9094	47	54	16	**2 0**
67–9095	47	51	16	**10**
67–9114	60	5	24	**1 3**
67–9121	60	16	24	**2 0**
67–9126	28	19	8	P.O.A.
89–3022	38	14	12	P.O.A.
89–4041	28	2	7	**10 6**
89–4046	28	8	7	**18 6**
89–4240	28	12	7	**2 6**
89–4241	28	13	7	**5 0**
89–4247	28	6	7	**8 0**
89–4248	28	3	7	**2 6**
89–4249	28	4	7	**5 0**
89–4257	28	5	7	**1 3**
89–4258	28	14	7	**1 3**
89–4259	28	15	7	**3 0**
89–5036	34	38	10	**5 0**
89–5061	34	34	10	**2 0 0**
$\frac{3}{16}$″ dia.	13	95	1	P.O.A.
$\frac{1}{4}$″ dia.	16	105	2	P.O.A.
$\frac{1}{4}$″ dia.	34	17	10	P.O.A.
$\frac{5}{16}$″ dia.	15	31	2	P.O.A.

THERE'S OVER 90 YEARS' REPUTATION FOR QUALITY BEHIND THE B.S.A. TRADE MARKS, WHICH ARE YOUR SAFEGUARD

NUMERICAL INDEX SIDE-CAR CHASSIS—'A' GROUP

Part No.	Page	Price £ s. d.
1–5945	68	4
1–5945	68	4
2–46	65	4
2–46	65	4
2–46	65	4
2–46	66	4
2–46	66	4
2–49	66	4
2–49	68	4
2–49	68	4
2–49	68	4
2–130	65	2
2–803	66	6
2–803	66	6
2–995	66	1
2–1462	68	Doz. 6
2–1462	68	Doz. 6
2–1813	66	4
2–1925	65	6
2–1925	65	6
2–1925	65	6
2–1945	66	2
2–1946	65	1 0
2–2395	68	2
2–2395	68	2
2–2899	68	2
2–2899	68	2
3–12	68	8
3–34	68	1 6
3–36	68	2 6
3–37	68	2 0
3–62	68	1 0
3–101	68	2
3–103	68	Doz. 1 6
3–107	66	1
3–107	65	1
3–108	65	1
3–110	65	Doz. 6
3–111	65	1
3–111	65	1
3–111	66	1
3–111	66	1
3–345	65	1 0
3–603	66	10 6
3–619	65	8
3–619	65	8
3–641	66	8
3–663	65	4
3–664	65	4
3–839	66	2 0
3–861	66	4 0
3–953	65	6
3–953	65	6
3–953	66	6
3–1021	66	10 6
3–1080	66	4 0
3–1137	65	6
3–1241	68	2 0
3–1252	65	6 0
3–1258	65	5 0
3–1259	65	8 0
3–1271	65	1 0
3–1271	65	1 0
3–1271	65	1 0
3–1289	65	2 0
3–1290	65	4
3–1369	66	4 0
3–1372	65	2 0
3–1373	65	7 0
3–1379	66	5 6
3–1383	66	1 0
3–1393	65	4 0
3–1509	66	10
3–1603	65	1 2 0
3–1685	68	4 0
3–1700	65	1 2 0
3–1701	65	1 0 0
3–1702	68	15 0
3–1703	66	10 0
3–1704	66	11 0
3–1706	66	3 0
3–1706	66	3 0
3–1709	65	1 10 0
3–1712	66	1 6
3–1714	66	8
3–1715	66	4
3–1716	65	10 0
3–1719	65	19 0
3–1720	65	1 6 0
3–1724	65	1 16 0
3–1725	65	10 0
3–1730	68	2 5 0
3–1731	68	2 15 0
3–1741	68	15 0
3–1746	66	1 9 0
3–1748	65	16 0
3–1750	66	10 0
3–1795	68	1 6
3–1816	68	1 0
3–9077	68	1 5 0
3–9263	65	1 4 0
3–9264	66	1 4 0
3–9380	68	3 3 0
3–9381	68	16 9
15–716	65	2
15–5753	66	8
19–1109	68	P.O.A.
24–875	66	8
24–5860	68	4
24–5914	65	2
24–5914	65	2
24–5914	66	2
24–8784	68	1
24–8784	68	1
27–6810	68	1
27–6974	68	8
27–7010	68	Doz. 3 6
27–8039	68	2
27–8560	68	1
27–8560	68	1
28–2080	65	3
28–2080	66	3
28–2080	68	3
28–2338	68	4
28–2338	68	4
30–650	66	4
30–1215	66	6
31–4070	68	2
31–7275	68	8
35–33	66	1
35–33	66	1
35–33	68	1
35–705	68	Doz. 4
35–708	66	Doz. 4
35–713	65	Doz. 4
35–713	65	Doz. 4
35–713	66	Doz. 4
35–722	65	Doz. 4
65–4185	66	10
66–5524	65	2
¼″ dia.	68	P.O.A.

Buy only
It pays to buy only
GENUINE BSA SPARES
GENUINE BSA SPARES
This carton contains
1 PISTON COMPLETE
1 M/M O/SIZE 66-859
MODEL M22 1959

ENGINE AND FRAME MARKINGS

1954 PLUNGER FRAME MODELS

Model	Type	Engine	Frame
A7	500 c.c. O.H.V. Twin	BA7–20001 upwards	BA7S–8950 upwards
A7	500 c.c. O.H.V. Star Twin	BA7S–20001 upwards	
A10	650 c.c. O.H.V. Twin	BA10–70001 upwards	

1954 SWINGING ARM MODELS

Model	Type	Engine	Frame
A7	500 c.c. O.H.V. Twin	CA7–101 upwards	CA7–101 upwards
A7	500 c.c. O.H.V. Star Twin	CA7S–101 upwards	
A7	500 c.c. O.H.V. Shooting Star	CA7SS–101 upwards	
A10	650 c.c. O.H.V. Twin	CA10–101 upwards	

1955 PLUNGER FRAME MODELS

Model	Type	Engine	Frame
A7	500 c.c. O.H.V. Twin	BA7–3001 upwards	BA7S–15001 upwards
A7	500 c.c. O.H.V. Star Twin	BA7S–2601 upwards	
A10	650 c.c. O.H.V. Twin	BA10–11001 upwards	

1955 SWINGING ARM MODELS

Model	Type	Engine	Frame
A7	500 c.c. O.H.V. Twin	CA7–1501 upwards	CA7–7001 upwards
A7	500 c.c. O.H.V. Shooting Star	CA7SS–501 upwards	
A10	650 c.c. O.H.V. Twin	CA10–4501 upwards	

WHEN REPLACEMENTS BECOME NECESSARY FOR YOUR B.S.A. MOTOR CYCLE ALWAYS FIT GENUINE B.S.A. SPARES

PISTON CHART 1954 AND 1955

MODEL	Compression ratio	PISTON COMPLETE (2)			COMPRESSION RING (4)			PISTON SCRAPER RING (2)		
		Standard	½ mm. O.S.	1 mm. O.S.	Standard	½ mm. O.S.	1 mm. O.S.	Standard	½ mm. O.S.	1 mm. O.S.
A7 500 c.c. O.H.V.	6.7	67–460	67–462	67–464	67–407	67–408	67–409	67–410	67–411	67–412
Star Twin and Shooting Star 500 c.c. O.H.V.	7.25	67–533	67–535	67–537	67–407	67–408	67–409	67–410	67–411	67–412
	8.0	67–566	67–568	67–570	67–407	67–408	67–409	67–410	67–411	67–412
A10 650 c.c. Twin O.H.V.	6.5	67–423	67–425	67–427	67–311	67–312	67–313	67–314	67–315	67–316

EVERY OWNER OF A B.S.A. MOTOR CYCLE IS STRONGLY ADVISED TO BUY ONLY—GENUINE B.S.A. SPARE PARTS

CARBURETTERS AND SETTINGS 1954 AND 1955

MESSRS AMALGAMATED CARBURETTERS LTD., PERRY BARR, BIRMINGHAM

Models	Type	Choke Size (Inches)	Main Jet	Throttle Valve	Needle Position	Needle Jet	Engine End Size (Inches)	Year
A7 Plunger and Swinging Arm	276EU/1DB	$\frac{15}{16}$	140	6/4	4	.107	$\frac{15}{16}$	1954
A7 Star Twin Plunger and Swinging Arm	276FD/1DB	1	160	6/4	3	.107	$1\frac{1}{16}$	1954
A10 Plunger and Swinging Arm	276GG/1DB	$1\frac{1}{16}$	170	6/4	2	.107	$1\frac{1}{16}$	1954
A7 Shooting Star	276GK/1BS	1	160	6/4	3	.107	$1\frac{1}{16}$	1954
A10 Plunger	276GG/1DB	$1\frac{1}{16}$	170	6/4	2	.107	$1\frac{1}{16}$	1955
A7 Swinging Arm	376/4	$\frac{15}{16}$	210	376/3½	2	.107	$\frac{15}{16}$	1955
A7 Shooting Star	376/15	1	260	376/3½	3	.107	$1\frac{1}{16}$	1955
A10 Swinging Arm	376/1	$1\frac{1}{16}$	240	376/4	3	.1065	$1\frac{1}{16}$	1955

STANDARD BOLTS. All Bolts are C.E.I. unless otherwise stated.

Part No.	Length under Head	Thickness of Head	Length of Thread	Across Flats	Diameter
2–14	1.1/32″	3/16″	13/16″	.440″ Hex.	1/4″
2–204	1/2″	3/16″	1/2″	.440″ Hex.	1/4″
2–220	3/8″	3/16″	3/8″	.440″ Hex.	1/4″
2–1354	.641″	.187″	.641″	.440″ Hex.	1/4″
2–1402	7/8″	1/8″	3/8″	.440″ Hex.	1/4″
2–2273	7/16″	5/32″	3/8″	.440″ Hex.	1/4″
24–225	.750″	.187″	3/8″	.440″ Hex.	1/4″
1–5069	.625″	.187″	.625″	.525″ Hex.	5/16″
2–129	.750″	.250″	.625″	.440″ Hex.	5/16″
2–1934	.750″	.156″	.625″	.440″ Hex.	5/16″
2–6026	1.187″	.156″	.625″	.440″ Hex.	5/16″
15–480	1.109″	.250″	.781″	.525″ Hex.	5/16″
15–1355	1.500″	.218″	.625″	.525″ Hex.	5/16″
15–7354	.625″	.156″	.625″	.440″ Hex.	5/16″
27–6311	.750″	.125″	.625″	.440″ Hex.	5/16″
28–2338	.718″	.218″	.687″	.525″ Hex.	5/16″
24–649	.877″	.187″	.877″	.594″ Hex.	3/8″
65–4185	2.687″	.250″	.750″	.504″ Hex.	3/8″

All Bolts are C.E.I. (Screwdriver slotted) unless otherwise stated.

Part No.	Length under Head	Thickness of Head	Length of Thread	Across Head	Diameter
1–4606	.500″	.125″	.500″	.312″	3/16″
2–360	.406″	.078″	.406″	.312″	3/16″
2–498	.312″	.062″	.312″	.312″	3/16″ Whit.
2–1309	.343″	.062″	.343″	.312″	3/16″
2–2582	.343″	.125″	.343″	.250″	3/16″ Whit.
24–7065	.250″	.062″	.250″	.312″	3/16″
2–77	.312″	.062″	.312″	.375″	1/4″
2–79	.500″	.109″	.500″	.375″	1/4″
2–510	.656″	.093″	.375″	.375″	1/4″
2–1500	.687″	.109″	.375″	.375″	1/4″
2–2210	.718″	.062″	.652″	.562″	1/4″
2–2378	.656″	.109″	.656″	.375″	1/4″
15–7161	.500″	.125″	.312″	.500″	1/4″
2–2980	1.25″	.93″	.625″	.562″	5/16″

STANDARD NUTS. All Nuts are C.E.I. unless otherwise stated.

Part No.	Across Flats	Thickness	Size
1–4616	.340″ Hex.	.162″	3/16″
2–47	.312″ Hex.	.140″	3/16″
2–1598	.255″ Hex.	.110″	3/16″
15–8147	.340″ Hex.	.125″	3/16″
25–7151	.340″ Hex.	.187″	3/16″
1–6032	.340″ Hex.	3/16″	1/4″
2–51	.440″ Hex.	.250″	1/4″
2–53	.440″ Hex.	.109″	1/4″ Whit.
2–443	.440″ Hex.	.109″	1/4″
2–1027	.340″ Hex.	1/8″	1/4″
2–2395	.440″ Hex.	.187″	1/4″
2–49	.525″ Hex.	.218″	5/16″
2–883	.440″ Hex.	.343″	5/16″
2–1616	.440″ Hex.	.125″	5/16″
15–5196	.525″ Hex.	.281″	5/16″
15–6524	.525″ Hex.	.175″	5/16″
24–563	.440″ Hex.	.187″	5/16″
24–6040	.525″ Hex.	.156″	5/16″
1–1706	.594″ Hex.	.250″	3/8″
2–46	.594″ Hex.	.312″	3/8″
2–1813	.594″ Hex.	.218″	3/8″
3–720	.594″ Hex.	.187″	3/8″
24–5161	.594″ Hex.	.343″	3/8″
24–5764	.782″ Hex.	.312″	3/8″
2–440	.594″ Hex.	.312″	7/16″
2–933	.525″ Hex.	.375″	7/16″
2–1925	.782″ Hex.	.375″	7/16″
15–152	.592″ Hex.	.406″	7/16″
15–541	.782″ Hex.	.281″	7/16″
24–5860	.594″ Hex.	.187″	7/16″
25–4325	.919″ Hex.	.540″	7/16″
2–52	.919″ Hex.	.406″	1/2″
2–124	.782″ Hex.	.203″	1/2″
24–7000	.782″ Hex.	.250″	1/2″
27–6716	.782″ Hex.	.187″	1/2″
2–835	.919″ Hex.	.375″	9/16″
15–1455	.782″ Hex.	.218″	9/16″
24–4255	.919″ Hex.	.187″	9/16″
28–53	.782″ Hex.	.344″	9/16″

STANDARD WASHERS (Plain)

Part No.	Outside Dia.	Inside Dia.	Thickness	Part No.	Outside Dia.	Inside Dia.	Thickness
1–1804	.680″	.385″	.072″	2–2580	.500″	.275″	.064″
2–130	.687″	.380″	.080″	3–3525	.562″	.218″	.048″
2–370	.625″	.317″	.156″	15–39	.843″	.505″	.064″
2–525	.500″	.255″	.048″	15–431	.750″	.442″	.064″
2–861	.750″	.380″	.081″	15–5155	.525″	.328″	.408″
2–923	.625″	.317″	.062″	24–594	.937″	.505″	.092″
2–1096	.375″	.192″	.044″	24–7911	.875″	.380″	.156″
2–1291	.750″	.522″	.080″	25–7180	1.00″	.281″	.048″
2–1374	.656″	.255″	.080″	26–9461	.562″	.203″	.048″
2–1945	.875″	.442″	.064″	27–5676	1.00″	.380″	.092″
2–2138	.380″	.750″	.064″	27–8560	.625″	.255″	.048″

STANDARD WASHERS (Spring)

Part No.	Outer Dia.	Inside Dia.	Thickness	Part No.	Outer Dia.	Inside Dia.	Thickness
2–522	.750″	.390″	.056″	15–716	.937″	.453″	.064″
2–995	.656″	.380″	.040″ double	24–978	.437″	.255″	.040″
2–1462	.593″	.255″	.040″	24–6035	.593″	.317″	.040 ″double
2–1967	.875″	.440″	.064″	27–6043	.750″	.437″	.046″ double
2–2903	.562″	.406″	.062″	24–8784	.625″	.315″	.040″
3–110	.441″	.281″	.080″	35–33	.500″	.343″	.080″
3–111	.614″	.406″	.104″				

STANDARD WASHERS (Shakeproof)

Part No.	Outer Diameter	Inside Diameter	Part No.	Outer Diameter	Inside Diameter
29–541	1/2″	1/4″	36–399	11/16″	3/8″
29–3319	3/8″	3/16″	65–595	7/8″	1/2″
36–341	9/16″	5/16″	66–4707	11/16″	3/8″
36–382	9/16″	5/16″	66–4708	3/4″	7/16″

BSA

'A' GROUP

MOTOR CYCLE EXCHANGE REPLACEMENT SERVICE

1954 AND 1955 MODELS

FULLY GUARANTEED EXCHANGE UNITS

ENGINES COMPLETE

	£	s.	d.
Engine complete with electrical equipment, less Carburetter (A7, A10)	30	10	0
Engine complete with electrical equipment, less Carburetter (Shooting Star, Star Twin)	32	4	0
Engine only, less electrical equipment and Carburetter (A7, A10)	23	0	0
Engine only, less electrical equipment and Carburetter (Star Twin), Shooting Star	24	14	0
Engine and Gearbox unit assembly less Carburetter (A7, A10 (Plunger)	50	14	0
Engine and Gearbox unit assembly (Star Twin Plunger)	52	8	0
Crankshaft with flywheel, reground and new liners supplied (All Models)	2	10	0
Rebored cylinder fitted with piston complete (All Models)	4	4	0
Oil pump (All Models)	1	5	0

GEARBOX COMPLETE

	£	s.	d.
Gearbox complete with clutch (A7, A10 Plunger)	20	15	0
Gearbox complete with clutch (Swinging Arm Models)	20	1	0
Gearbox only (A7, A10)	15	5	0
Clutch only (A7, A10 Plunger)	5	10	0
Clutch only (Swinging Arm Models)	4	16	0
Clutch plate with new inserts (each)		5	0
Clutch chainwheel reconditioned (Swinging Arm Models)	1	5	0

FRAME

	£	s.	d.
Plunger frame complete with centre stand (A7, A10)	14	12	0
Frame front (A7, A10 Plunger)	6	0	0
Chainstay and backstay assembly (A7, A10 Plunger)	6	14	6
Frame front (Swinging Arm Models)	12	10	0

FRONT FORKS

	£	s.	d.
Telescopic forks complete (A7, A10)	9	5	0
Telescopic fork shaft re-setting (A7, A10)		3	6

PETROL TANKS

	£	s.	d.
*Petrol tank less fittings, repaired, re-chromed and re-enamelled (A7 Plunger) (A7, A10 Swinging Arm)	5	0	0
*Petrol tank less fittings, repaired, re-chromed and re-enamelled (A10 Plunger)	5	10	0
*Petrol tank less fittings, re-chromed and re-enamelled only (A7 Plunger) (A7, A10 Swinging Arm)	3	10	0
*Petrol tank less fittings, re-chromed and re-enamelled only (A10 Plunger)	4	0	0
*Petrol tank less fittings repaired and re-enamelled (A7 Plunger) (A7, A10 Swinging Arm)	2	15	0
*Petrol tank, less fittings, repaired and re-enamelled (A10 Plunger)	3	5	0
*Petrol tank, less fittings, re-enamelled only (A7 Plunger) (A7, A10 Swinging Arm)	1	5	0
*Petrol tank, less fittings, re-enamelled only (A10 Plunger)	1	15	0
Oil tank renovated (A7, A10 Plunger)	1	7	6
Oil tank renovated (Swinging Arm)	1	15	0

WHEELS

	£	s.	d.
*Front wheel reconditioned (less brake), Telescopic forks (A7, A10)	4	10	0
*Rear wheel reconditioned (less brake) (A7, A10)	4	0	0
Re-lined brake shoes, per pair (A7, A10)		15	0
Twin seat recovered	1	17	6

* State colour required.

Two colour finish extra.

The above prices do not include carriage costs.

ASK YOUR DEALER FOR FURTHER PARTICULARS

Printed in England

Copyright B.S.A. Co., Ltd.